SAMSUNG

DVD-VCR COMBINATION

Chassis : Kaiser
SV-DVD340/DVD540A
SV-DVD545/DVD640
DVD-V340/V540

SERVICE Manual

If you want to know additional information which is not included on this Service Manual, please refer to the SV-DVD440 Training Manual (AK82-00513A).

DVD-VCR COMBINATION

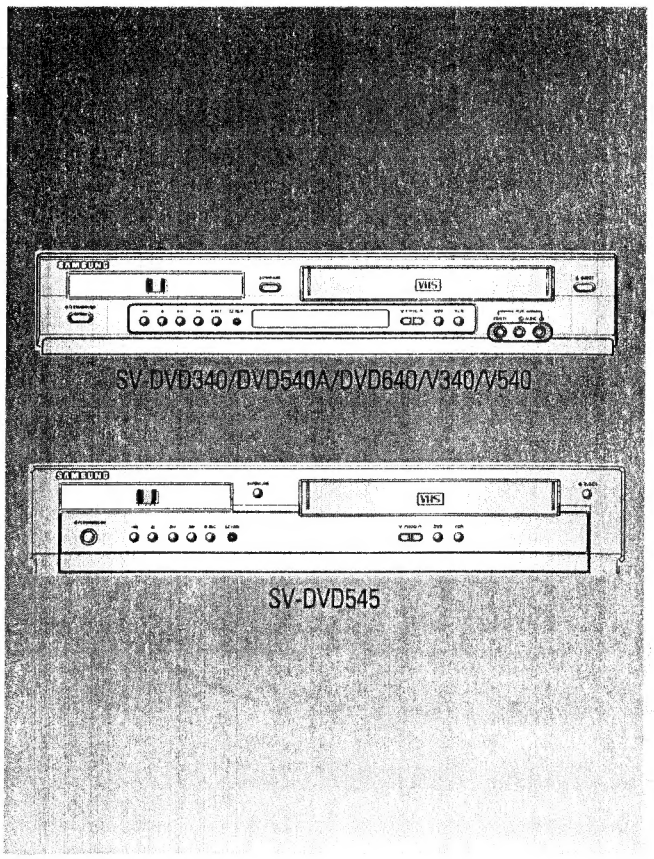

CONTENTS

1. Precautions
2. Alignment and Adjustment
3. Exploded Views and Parts List
4. Electrical Parts List
5. Block Diagram
6. Schematic Diagrams

IMPORTANT SERVICE GUIDE

◆ MODE SWITCH (PROGRAM SWITCH) ASSEMBLY POINT

1) When installing the ass'y deck on the Main PCB, be sure to align the assembly point of mode switch.

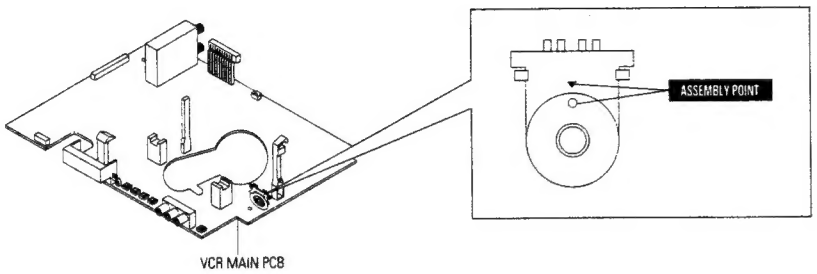

Fig. 1

◆ HOW TO EJECT THE CASSETTE TAPE (If the tape is stuck in the unit)

1) Turn the Gear Worm ❶ clockwise in the direction of arrow with a screwdriver. (See Fig. 2)
(Other method ; Remove the screw of Motor Load Ass'y, Separate the Motor Load Ass'y)
2) When Slider S, T approachs the unloading position, rotate holder Clutch counterclockwise after inserting screwdriver in the frame's bottom hole in order to wind the unwound tape. (Refer to Fig. 3)
(If you rotate Gear Worm ❶ continuously when tape is unwinding, you may cause tape contamination by grease and tape damage. Be sure to wind the unwound tape with the unit in the horizontall position.)
3) Rotate Gear Worm ❶ clockwise using a screwdriver until the mecha is in the eject state. Remove the tape. (Refer to Fig. 2)

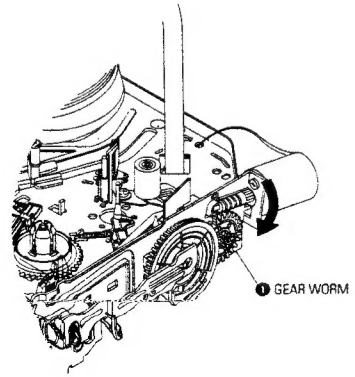

Fig. 2

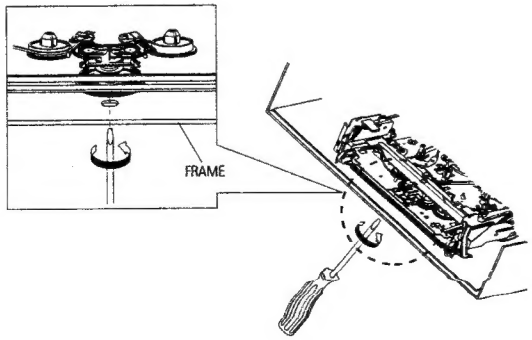

Fig. 3

1. Precautions

1-1 Safety Precautions

1) Before returning an instrument to the customer, always make a safety check of the entire instrument, including, but not limited to, the following items:

(1) Be sure that no built-in protective devices are defective or have been defeated during servicing. (1)Protective shields are provided to protect both the technician and the customer. Correctly replace all missing protective shields, including any removed for servicing convenience.
(2)When reinstalling the chassis and/or other assembly in the cabinet, be sure to put back in place all protective devices, including, but not limited to, nonmetallic control knobs, insulating fish papers, adjustment and compartment covers/shields, and isolation resistor/capacitor networks. Do not operate this instrument or permit it to be operated without all protective devices correctly installed and functioning.

(2) Be sure that there are no cabinet openings through which adults or children might be able to insert their fingers and contact a hazardous voltage. Such openings include, but are not limited to, excessively wide cabinet ventilation slots, and an improperly fitted and/or incorrectly secured cabinet back cover.

(3) Leakage Current Hot Check-With the instrument completely reassembled, plug the AC line cord directly into a 120V AC outlet. (Do not use an isolation transformer during this test.) Use a leakage current tester or a metering system that complies with American National Standards institute (ANSI) C101.1 Leakage Current for Appliances and Underwriters Laboratories (UL) 1270 (40.7). With the instrument's AC switch first in the ON position and then in the OFF position, measure from a known earth ground (metal water pipe, conduit, etc.) to all exposed metal parts of the instrument (antennas, handle brackets, metal cabinets, screwheads, metallic overlays, control shafts, etc.), especially any exposed metal parts that offer an electrical return path to the chassis.
Any current measured must not exceed 0.5mA. Reverse the instrument power cord plug in the outlet and repeat the test. See Fig. 1-1.
Any measurements not within the limits specified herein indicate a potential shock hazard that must be eliminated before returning the instrument to the customer.

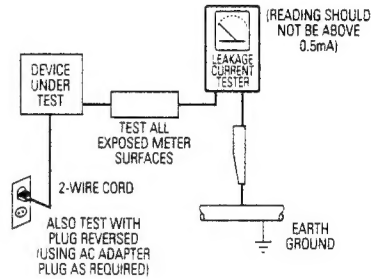

Fig. 1-1 AC Leakage Test

(4) Insulation Resistance Test Cold Check-(1) Unplug the power supply cord and connect a jumper wire between the two prongs of the plug. (2) Turn on the power switch of the instrument. (3) Measure the resistance with an ohmmeter between the jumpered AC plug and all exposed metallic cabinet parts on the instrument, such as screwheads, antenna, control shafts, handle brackets, etc. When an exposed metallic part has a return path to the chassis, the reading should be between 1 and 5.2 megohm. When there is no return path to the chassis, the reading must be infinite. If the reading is not within the limits specified, there is the possibility of a shock hazard, and the instrument must be repaired and rechecked before it is returned to the customer. See Fig. 1-2.

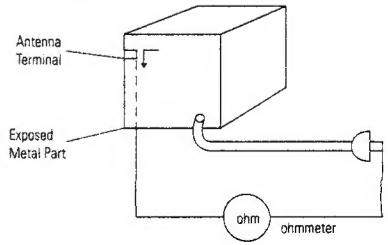

Fig. 1-2 Insulation Resistance Test

2) Read and comply with all caution and safety related notes on or inside the cabinet, or on the chassis.

3) Design Alteration Warning-Do not alter or add to the mechanical or electrical design of this instrument. Design alterations and additions, including but not limited to, circuit modifications and the addition of items such as auxiliary audio output connections, might alter the safety characteristics of this instrument and create a hazard to the user. Any design alterations or additions will make you, the servicer, responsible for personal injury or property damage resulting therefrom.

4) Observe original lead dress. Take extra care to assure correct lead dress in the following areas: (1) near sharp edges, (2) near thermally hot parts (be sure that leads and components do not touch thermally hot parts), (3) the AC supply, (4) high voltage, and (5) antenna wiring. Always inspect in all areas for pinched, out-of-place, or frayed wiring, Do not change spacing between a component and the printed-circuit board. Check the AC power cord for damage.

5) Components, parts, and/or wiring that appear to have overheated or that are otherwise damaged should be replaced with components, parts and/ or wiring that meet original specifications.
Additionally, determine the cause of overheating and/or damage and, if necessary, take corrective action to remove any potential safety hazard.

6) Product Safety Notice-Some electrical and mechanical parts have special safety-related characteristics which are often not evident from visual inspection, nor can the protection they give necessarily be obtained by replacing them with components rated for higher voltage, wattage, etc. Parts that have special safety characteristics are identified by shading, an (⚠)or a (⚠)on schematics and parts lists. Use of a substitute replacement that does not have the same safety characteristics as the recommended replacement part might create shock, fire and/or other hazards. Product safety is under review continuously and new instructions are issued whenever appropriate.

1-2 Servicing Precautions

CAUTION : Before servicing units covered by this service manual and its supplements, read and follow the Safety Precautions section of this manual.

Note : If unforseen circumstances create conflict between the following servicing precautions and any of the safety precautions, always follow the safety precautions. Remember: Safety First.

1-2-1 General Servicing Precautions

(1) a. Always unplug the instrument's AC power cord from the AC power source before (1) re-moving or reinstalling any component, circuit board, module or any other instrument assembly, (2) disconnecting any instrument electrical plug or other electrical connection, (3) connecting a test substitute in parallel with an electrolytic capacitor in the instrument.
b. Do not defeat any plug/socket B+ voltage interlocks with which instruments covered by this service manual might be equipped.
c. Do not apply AC power to this instrument and /or any of its electrical assemblies unless all solid-state device heat sinks are correctly installed.
d. Always connect a test instrument's ground lead to the instrument chassis ground before connecting the test instrument positive lead. Always remove the test instrument ground lead last.

Note : Refer to the Safety Precautions section ground lead last.

(2) The service precautions are indicated or printed on the cabinet, chassis or components. When servicing, follow the printed or indicated service precautions and service materials.

(3) The components used in the unit have a specified flame resistance and dielectric strength.
When replacing components, use components which have the same ratings. Components identified by shading, by(⚠) or by (⚠) in the circuit diagram are important for safety or for the characteristics of the unit. Always replace them with the exact replacement components.

(4) An insulation tube or tape is sometimes used and some components are raised above the printed wiring board for safety. The internal wiring is sometimes clamped to prevent contact with heating components. Install such elements as they were.

(5) After servicing, always check that the removed screws, components, and wiring have been installed correctly and that the portion around the serviced part has not been damaged and so on. Further, check the insulation between the blades of the attachment plug and accessible conductive parts.

1-2-2 Insulation Checking Procedure

Disconnect the attachment plug from the AC outlet and turn the power ON. Connect the insulation resistance meter (500V) to the blades of the attachment plug. The insulation resistance between each blade of the attachment plug and accessible conductive parts(see note) should be more than 1 Megohm.

Note : Accessible conductive parts include metal panels, input terminals, earphone jacks, etc.

1-3 ESD Precautions

Electrostatically Sensitive Devices (ESD)

Some semiconductor (solid state) devices can be damaged easily by static electricity.
Such components commonly are called Electrostatically Sensitive Devices(ESD). Examples of typical ESD devices are integrated circuits and some field-effect transistors and semiconductor chip components. The following techniques should be used to help reduce the incidence of component damage caused by static electricity.

(1) Immediately before handling any semiconductor component or semiconductor-equipped assembly, drain off any electrostatic charge on your body by touching a known earth ground. Alternatively, obtain and wear a commercially available discharging wrist strap device, which should be removed for potential shock reasons prior to applying power to the unit under test.

(2) After removing an electrical assembly equipped with ESD devices, place the assembly on a conductive surface such as aluminum foil, to prevent electrostatic charge buildup or exposure of the assembly.

(3) Use only a grounded-tip soldering iron to solder or unsolder ESD devices.

(4) Use only an anti-static solder removal devices. Some solder removal devices not classified as "anti-static" can generate electrical charges sufficient to damage ESD devices.

(5) Do not use freon-propelled chemicals. These can generate electrical charges sufficient to damage ESD devices.

(6) Do not remove a replacement ESD device from its protective package until immediately before your are ready to install it.(Most replacement ESD devices are packaged with leads electrically shorted together by conductive foam, aluminum foil or comparable conductive materials).

(7) Immediately before removing the protective materials from the leads of a replacement ESD device, touch the protective material to the chassis or circuit assembly into which the device will be installed.

CAUTION : Be sure no power is applied to the chassis or circuit, and observe all other safety precautions.

(8) Minimize bodily motions when handling unpackaged replacement ESD devices. (Otherwise harmless motion such as the brushing together of your clothes fabric or the lifting of your foot from a carpeted floor can generate static electricity sufficient to damage an ESD device).

1-4 Handling the optical pick-up

The laser diode in the optical pick up may suffer electrostatic breakdown because of potential static electricity from clothing and your body.

The following method is recommended.
(1) Place a conductive sheet on the work bench (The black sheet used for wrapping repair parts.)

(2) Place the set on the conductive sheet so that the chassis is grounded to the sheet.

(3) Place your hands on the conductive sheet(This gives them the same ground as the sheet.)

(4) Remove the optical pick up block

(5) Perform work on top of the conductive sheet. Be careful not to let your clothes or any other static sources to touch the unit.

- Be sure to put on a wrist strap grounded to the sheet.
- Be sure to lay a conductive sheet made of copper etc. Which is grounded to the table.

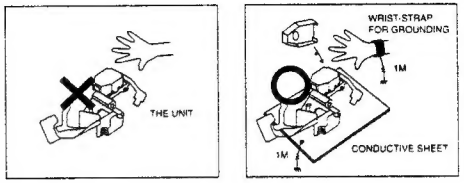

Fig.1-3

(6) Short the short terminal on the PCB, which is inside the Pick-Up ASS'Y, before replacing the Pick-Up. (The short terminal is shorted when the Pick-Up Ass'y is being lifted or moved.)

(7) After replacing the Pick-up, open the short terminal on the PCB.

1-5 Pick-up disassembly and reassembly

1-5-1 Disassembly

1) Remove the power cord.
2) Disassemble the Deck-Assy.
3) Make solder land 2 points short on Pick-up.
   (See Fig. 1-4)
4) Disassemble the Pick-up.

1-5-2 Assembly

1) Replace the Pick-up.
2) Remove the soldering 2 points on Pick-up.
3) Reassemble the Deck-Assy.

Note : If the assembly and disassembly are not done in correct sequence, the Pick-up may be damaged.

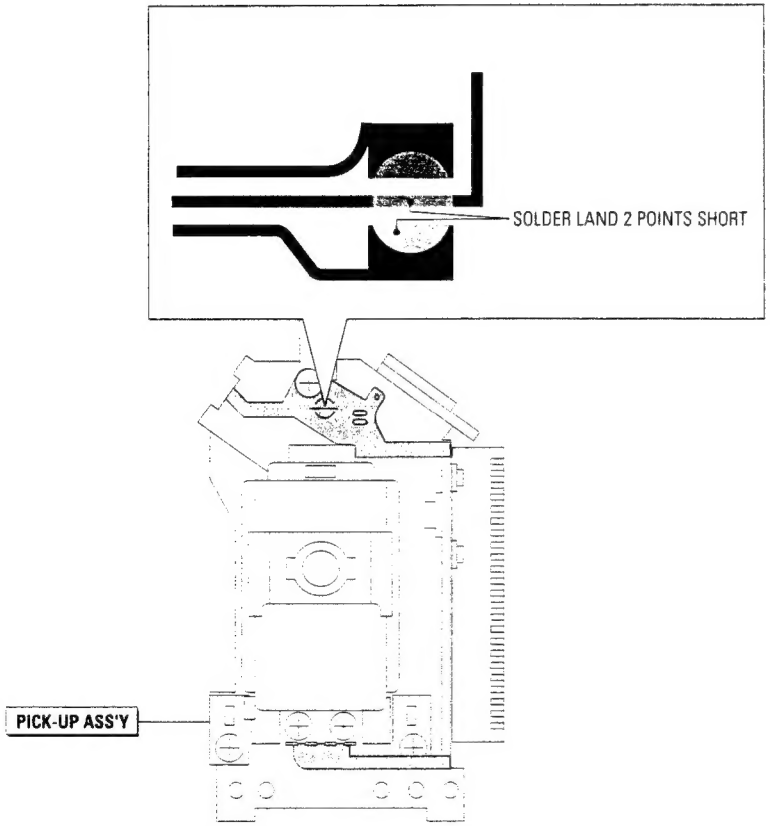

Fig. 1-4

2. Alignment and Adjustments

2-1 VCR Adjustment

2-1-1 Reference

1) X-Point (Tracking center) adjustment, "Head switching adjustment" and "NVRAM option setting" can be adjusted with remote control.
2) When replacing the Main PCB Micom (IC601) and NVRAM (IC603 ; EEPROM) be sure to adjust the "Head switching adjustment" and "NVRAM option setting".
3) When replacing the cylinder ass'y, be sure to adjust the "X-Point" and "Head switching adjustment".
4) How to adjust
   - Press the "TEST" botton on VCR MAIN PCB to set the adjustment mode.
   - If the corresponding adjustment button is pressed, the adjustment is performed automatically.
   - When the adjustment is completed, be sure to turn the power off.

2-1-1(a) Location of adjustment button of remote control

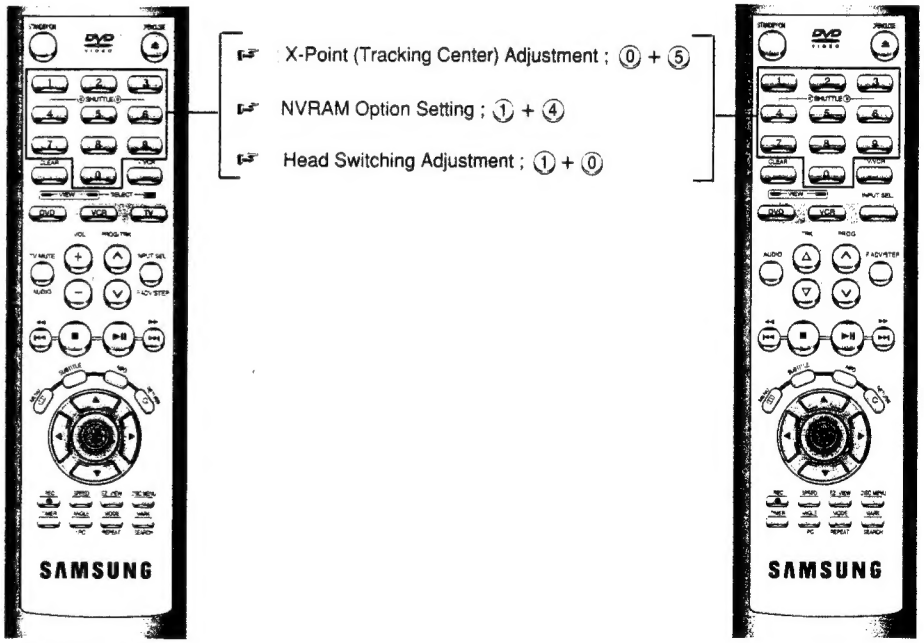

SV-DVD540A/DVD545
SV-DVD640, DVD-V540

SV-DVD340, DVD-V340

Fig. 2-1

2-1-1(b) TEST location for adjustment mode setting

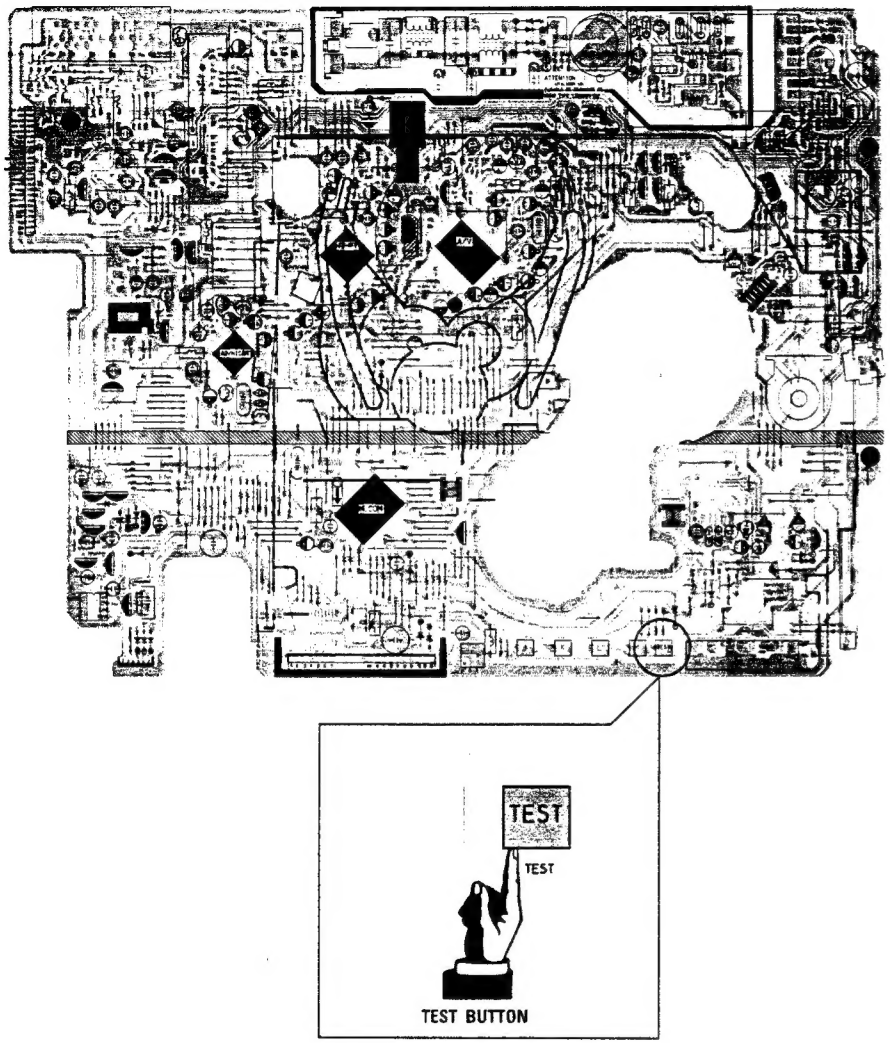

Fig. 2-2 VCR Main PCB (Top View)

2-1-2 Head Switching Point Adjustment

1) Playback the alignment tape.
2) Press the "TEST" botton on VCR MAIN PCB to set the adjustment mode. (See Fig. 2-2)
3) Press the "1, 0" buttons; remote control adjustment operates automatically. (See Fig. 2-1)

2-1-3 NVRAM Option Setting

1) NVRAM Option is adjusted in the factory.
2) In case Main PCB Micom (IC601) and NVRAM (IC603 ; EEPROM) are replaced, be sure to set the corresponding option number of the required model. (If the option is not set, the unit will not operate.)

1) Press the "TEST" botton on VCR MAIN PCB to set the adjustment mode. (See Fig. 2-2)
2) Press the "1, 4" button on the remote control. The option setting appears. (See Fig. 2-3)
3) Select the option number (See table 2-1) of corresponding model with "◀, ▶, ▲, ▼" buttons on the remote control.
4) After selecting the option number is completed, press the "▲" button of remote control. (If "▲" button is pressed, the selected number is changecolor. ; See Fig. 2-4)
5) Press the "ENTER" button of remote control again to store the option number.
6) Turn the Power off.

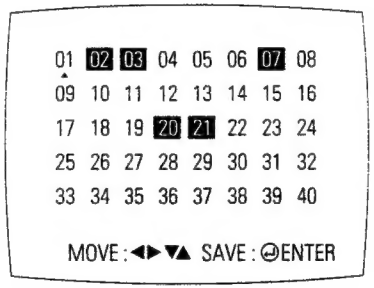

Fig. 2-3

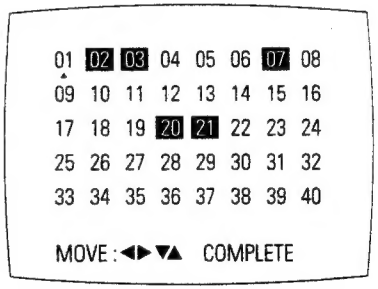

Fig. 2-4

<Table 2-1 NVRAM Option Table>

MODEL	OPTION NUMBERS
SV-DVD340/XEF	5, 9, 10, 12, 13, 15, 20, 21, 26, 33, 34, 35, 36, 38, 40, 47, 48, 49, 51, 61, 63, 65, 69
SV-DVD540A/XEF	2, 4, 5, 6, 7, 8, 9, 10, 11, 12, 13, 15, 16, 20, 21, 26, 32, 33, 34, 35, 36, 38, 40, 47, 48, 61, 63, 65, 69, 72
SV-DVD545/XEF	2, 4, 5, 6, 7, 8, 9, 10, 11, 12, 13, 16, 20, 21, 26, 32, 33, 34, 35, 36, 38, 40, 47, 48, 49, 61, 63, 65, 69, 72
SV-DVD640/XEF	2, 4, 5, 6, 7, 8, 9, 10, 11, 12, 13, 15, 16, 17, 20, 21, 26, 32, 33, 34, 35, 36, 38, 40, 44, 47, 48, 61, 63, 65, 69, 72
SV-DVD340/XEB	5, 9, 10, 12, 13, 15, 20, 21, 26, 33, 34, 35, 36, 38, 40, 42, 47, 48, 49, 51, 61, 63, 65, 69
SV-DVD540A/XEB	2, 4, 5, 6, 7, 8, 9, 10, 11, 12, 13, 15, 16, 20, 21, 26, 32, 33, 34, 35, 36, 38, 40, 42, 47, 48, 61, 63, 65, 69, 72
SV-DVD545/XEB	2, 4, 5, 6, 7, 8, 9, 10, 11, 12, 13, 16, 20, 21, 26, 32, 33, 34, 35, 36, 38, 40, 42, 47, 48, 49, 61, 63, 65, 69, 72
SV-DVD640/XEB	2, 4, 5, 6, 7, 8, 9, 10, 11, 12, 13, 15, 16, 17, 20, 21, 26, 32, 33, 34, 35, 36, 38, 40, 42, 44, 47, 48, 61, 63, 65, 69, 72
SV-DVD340/XEU	5, 9, 10, 12, 13, 15, 27, 34, 38, 40, 41, 47, 48, 49, 51, 61, 63, 65, 69
SV-DVD540A/XEU	3, 4, 5, 6, 7, 8, 9, 10, 11, 12, 13, 15, 27, 32, 34, 38, 40, 41, 47, 48, 61, 63, 65, 69, 72
SV-DVD545/XEU	3, 4, 5, 6, 7, 8, 9, 10, 11, 12, 13, 27, 32, 34, 38, 40, 41, 47, 48, 49, 61, 63, 65, 69, 72
SV-DVD640/XEU	3, 4, 5, 6, 7, 8, 9, 10, 11, 12, 13, 15, 17, 27, 32, 34, 38, 40, 41, 44, 47, 48, 61, 63, 65, 69, 72
SV-DVD340/XEUI	5, 9, 10, 12, 13, 15, 25, 26, 34, 38, 40, 43, 47, 48, 49, 51, 61, 63, 65, 69
SV-DVD540A/XEUI	3, 4, 5, 6, 7, 8, 9, 10, 11, 12, 13, 15, 25, 26, 32, 34, 38, 40, 43, 47, 48, 61, 63, 65, 69, 72
SV-DVD545/XEUI	3, 4, 5, 6, 7, 8, 9, 10, 11, 12, 13, 25, 26, 32, 34, 38, 40, 43, 47, 48, 49, 61, 63, 65, 69, 72
SV-DVD640/XEUI	3, 4, 5, 6, 7, 8, 9, 10, 11, 12, 13, 15, 17, 25, 26, 32, 34, 38, 40, 43, 44, 47, 48, 61, 63, 65, 69, 72
SV-DVD340/XEN,XEC	5, 9, 10, 12, 13, 15, 34, 36, 38, 40, 42, 47, 48, 49, 51, 61, 63, 65, 69
SV-DVD540A/XEN,XEC	2, 4, 5, 6, 7, 8, 9, 10, 11, 12, 13, 15, 16, 32, 34, 36, 38, 40, 42, 47, 48, 61, 63, 65, 69, 72
SV-DVD545/XEN,XEC	2, 4, 5, 6, 7, 8, 9, 10, 11, 12, 13, 16, 32, 34, 36, 38, 40, 42, 47, 48, 49, 61, 63, 65, 69, 72
SV-DVD640/XEN,XEC	2, 4, 5, 6, 7, 8, 9, 10, 11, 12, 13, 15, 16, 17, 32, 34, 36, 38, 40, 42, 44, 47, 48, 61, 63, 65, 69, 72
SV-DVD340/XEE	5, 9, 10, 12, 13, 15, 34, 36, 38, 40, 42, 47, 48, 49, 51, 61, 63, 65, 69
SV-DVD540A/XEE	2, 4, 5, 6, 7, 8, 9, 10, 11, 12, 13, 15, 16, 32, 34, 36, 38, 40, 42, 47, 48, 61, 63, 65, 69, 72
SV-DVD545/XEE	2, 4, 5, 6, 7, 8, 9, 10, 11, 12, 13, 16, 32, 34, 36, 38, 40, 42, 47, 48, 49, 61, 63, 65, 69, 72
SV-DVD640/XEE	2, 4, 5, 6, 7, 8, 9, 10, 11, 12, 13, 15, 16, 17, 32, 34, 36, 38, 40, 42, 44, 47, 48, 61, 63, 65, 69, 72
SV-DVD340/XEG,COM	5, 9, 10, 12, 13, 15, 34, 36, 38, 40, 42, 47, 48, 49, 51, 61, 63, 65, 69
SV-DVD540A/XEG,COM	2, 4, 5, 6, 7, 9, 10, 11, 12, 13, 15, 16, 32, 34, 36, 38, 40, 42, 47, 48, 61, 63, 65, 69, 72
SV-DVD545/XEG,COM	2, 4, 5, 6, 7, 9, 10, 11, 12, 13, 16, 32, 34, 36, 38, 40, 42, 47, 48, 49, 61, 63, 65, 69, 72
SV-DVD640/XEG,COM	2, 4, 5, 6, 7, 9, 10, 11, 12, 13, 15, 16, 17, 32, 34, 36, 38, 40, 42, 44, 47, 48, 61, 63, 65, 69, 72
SV-DVD340/XET	5, 9, 10, 12, 13, 15, 34, 36, 38, 40, 42, 47, 48, 49, 51, 61, 63, 65, 69
SV-DVD540A/XET	2, 4, 5, 6, 7, 9, 10, 11, 12, 13, 15, 16, 32, 34, 36, 38, 40, 42, 47, 48, 61, 63, 65, 69, 72
SV-DVD545/XET	2, 4, 5, 6, 7, 9, 10, 11, 12, 13, 16, 32, 34, 36, 38, 40, 42, 47, 48, 49, 61, 63, 65, 69, 72
SV-DVD640/XET	2, 4, 5, 6, 7, 9, 10, 11, 12, 13, 15, 16, 17, 32, 34, 36, 38, 40, 42, 44, 47, 48, 61, 63, 65, 69, 72
SV-DVD340/EUR,XEO	9, 10, 12, 13, 15, 17, 20, 33, 34, 36, 38, 42, 47, 48, 49, 51, 61, 63, 65, 69
SV-DVD540A/EUR,XEO	2, 4, 6, 7, 8, 9, 10, 11, 12, 13, 15, 16, 17, 20, 32, 33, 34, , 36, 38, 42, 47, 48, , 61, 63, 65, 69, 72
SV-DVD545/EUR,XEO	2, 4, 6, 7, 8, 9, 10, 11, 12, 13, 16, 17, 20, 32, 33, 34, 36, 38, 42, 47, 48, 49, 61, 63, 65, 69, 72
SV-DVD640/EUR,XEO	2, 4, 6, 7, 8, 9, 10, 11, 12, 13, 15, 16, 17, 20, 32, 33, 34, 36, 38, 42, 44, 47, 48, 61, 63, 65, 69, 72
DVD-V340/FES	9, 10, 12, 13, 15, 17, 20, 30, 34, 36, 38, 42, 47, 48, 49, 50, 52, 61, 63, 65, 69
DVD-V540/FES	2, 6, 7, 8, 9, 10, 11, 12, 13, 15, 16, 17, 20, 30, 32, 34, 36, 38, 42, 44, 47, 48, 61, 63, 65, 69
DVD-V340/AFR	9, 10, 12, 13, 15, 17, 20, 21, 30, 33, 34, 36, 38, 42, 47, 48, 49, 50, 52, 61, 63, 65, 69
DVD-V540/AFR	2, 6, 7, 8,9, 10, 11, 12, 13, 15, 16, 17, 20, 21, 30, 32, 33, 34, 36, 38, 42, 44, 47, 48, 61, 63, 65, 69

2-2 DVD Adjustment

2-2-1 Location of Test Point

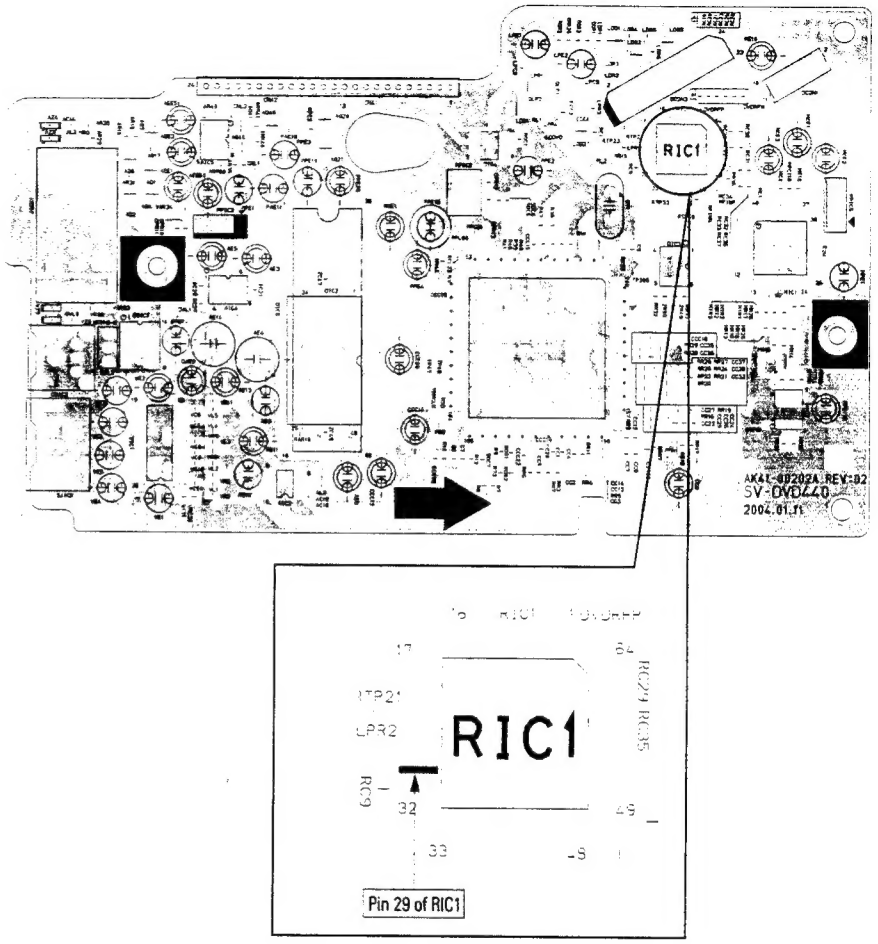

Fig. 2-5 Location of test Point (Main PCB - Top Side)

2-2-2 Skew Adjustment

2-2-2(a) Adjustment Spec. and Test Point

<Table 2-2> ◆ Test Disc ; Service not Available

Test Disc	Adjustment Spec.	Test Point	Adjustment Location
TDV-533 Chapter 14	Flat Waveform	"Pin 29 of RIC1" (DVD Main PCB - Top Side) (See Fig. 2-5)	Ass'y Deck - Top Side (See Fig. 2-6)

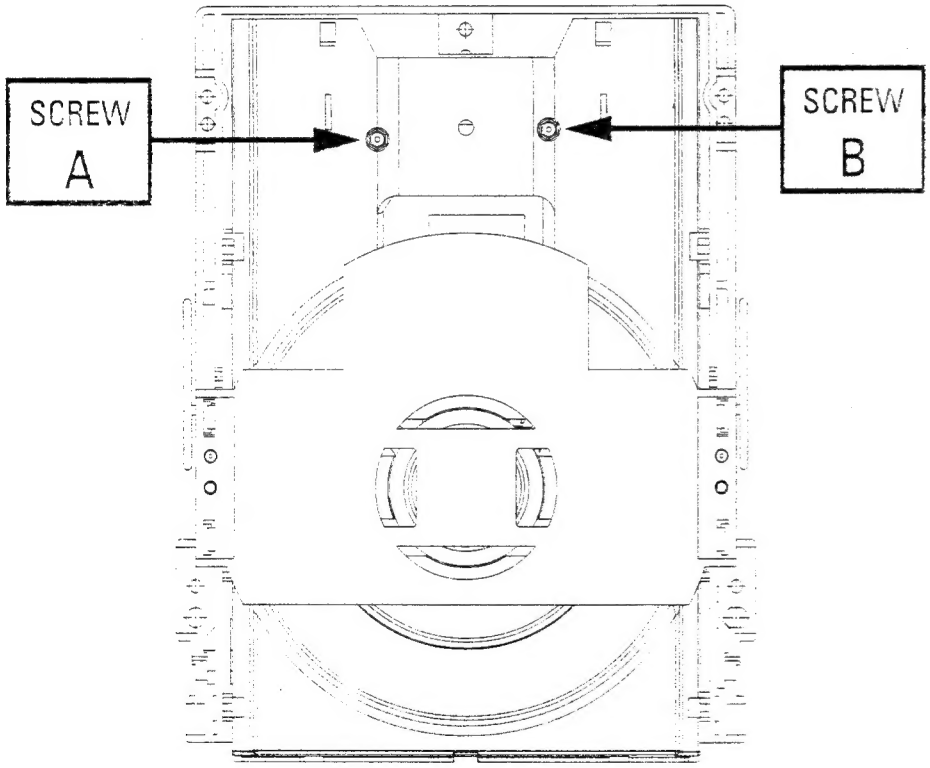

Fig. 2-6 Ass'y Deck (Top Side)

2-2-2(b) SKEW Adjustment Method

Needed to minimize the variations in Skew of the Pickup unit and to provide optimum match with the recorded signal on the Disc.

1) Connect an Oscilloscope to the "Pin 29 of RIC1" Test Point (See Fig. 2-5).
2) Connect Power, Open the Tray and Play Ch.14 Which is in the TDV-533 Disc.
   ◆ Set the Oscilloscope Range as follows :
   (Voltage ; 50mV/Div., Frequency ; 10m Sec.)
3) Adjust the Screws "A" and "B" (See Fig. 2-6) using a Hex screwdriver until you obtain a Flat Waveform and the picture is stable.
   Then, go to Chapter 1 and make sure the Waveform is Flat here as well.
   If not, you have to go back to Chapter 14 and adjust again.
   If you cannot obtain a Flat waveform, then the unit is defective.

Note : The Deck must be in a horizontal position. Use both "A" and "B" screws to adjust.

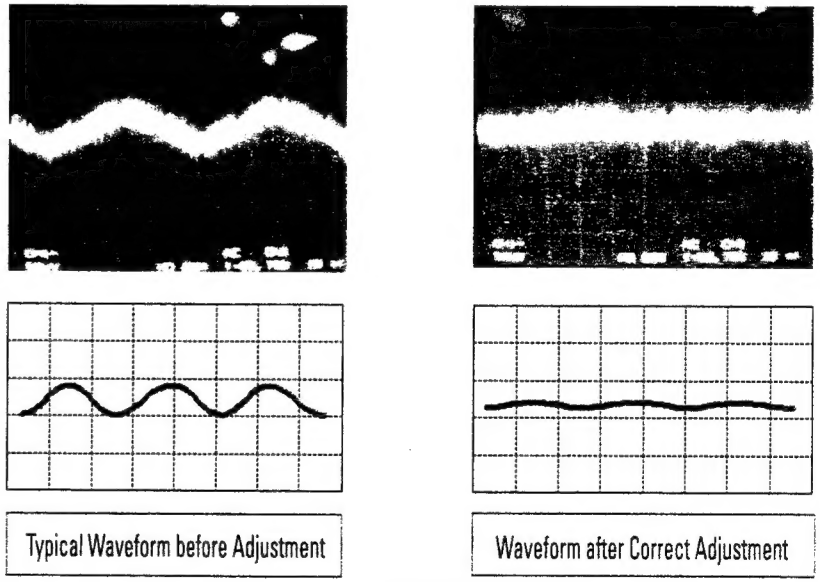

Fig. 2-7 Envelope Waveform

2-3 VCR Mechanical Adjustment

2-3-1 Tape Transport System and Adjustment Locations

The tape transport system has been adjusted precisely in the factory. Alignment is not necessary except for the following :
1) Noise observed on the screen.
2) Tape damage.
3) Parts replacement in the tape transport system.

Lower flange height of tape guide is used as the reference for the transport adjustment.
To maintain the height of the tape guide and prevent damage, do not apply excessive force onto the main base.

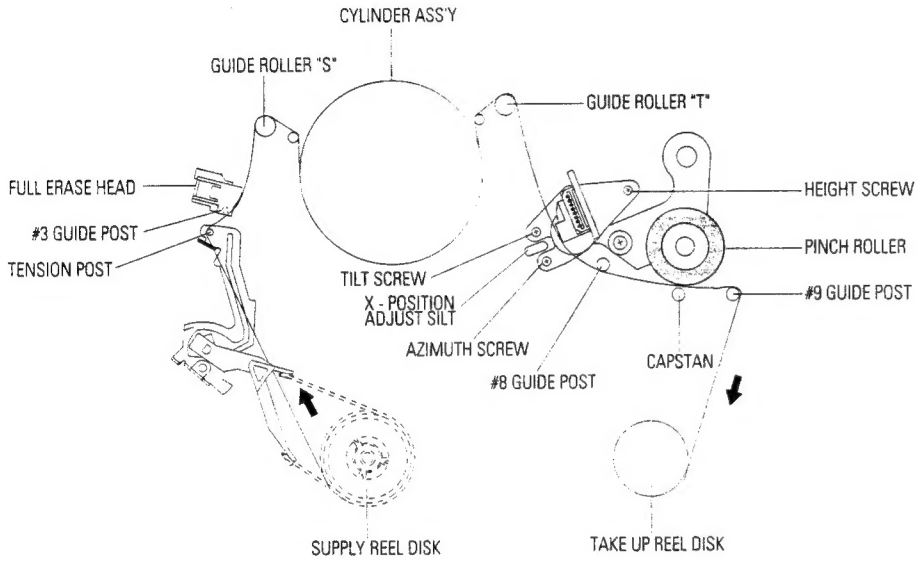

Fig. 2-8 Location of Tape Transport Adjustment

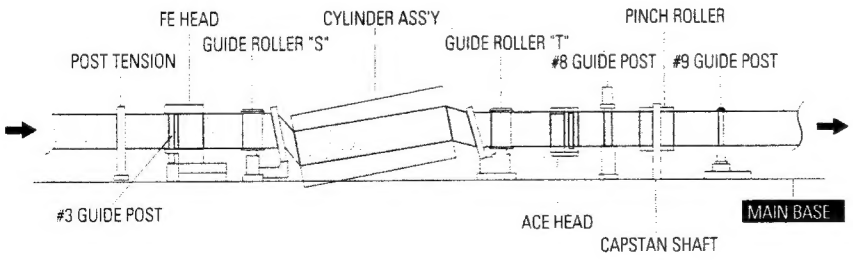

Fig. 2-9 Tape Travel Diagram

2-3-2 Tape Transport System Adjustment

When parts are replaced, perform the required adjustments by referring to procedures for the tape transport system. If there are any changes to the tape path, first run a T-120 tape and make sure excessive tape wrinkle does not occur at the tape guides.

- If tape wrinkle is observed at the guide roller S, T, turn the guide roller S, T until wrinkle disappears.
- If the tape wrinkle is still observed at the tape guide, perform the tilt adjustment of the ACE head.

(1) ACE Head Assembly Adjustment

a. ACE HEAD HEIGHT ADJUSTMENT

1) Run the alignment tape (Color bar) in the playback mode.
2) Observe surface of the audio head using a dental mirror.
3) Turn screw (C) clockwise or counterclockwise until the gap of lower tape edge and the lower edge of the control head is about 0.25mm. (Refer to Fig. 2-10 and 2-11)

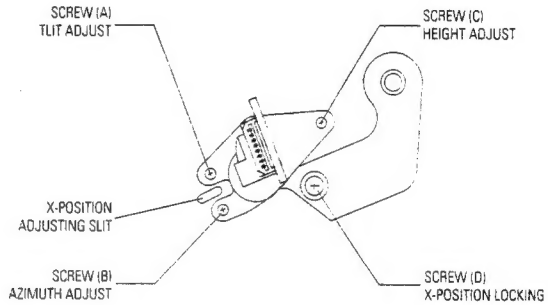

Fig. 2-10 Location of ACE Head Adjustment Screw

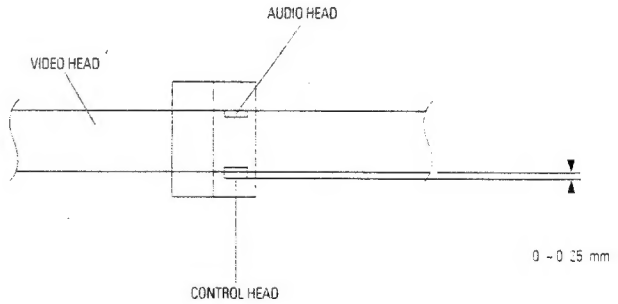

Fig. 2-11 ACE Head Height Adjustment

b. ACE HEAD TILT ADJUSTMENT

1) Playback a blank tape and observe the position of the tape at the lower flange of tape guide.
2) Confirm that there is no curl or wrinkle at the lower flange of tape guide as shown in Fig. 2-12 (B).
3) If a curl or wrinkle of the tape occurs, slightly turn the screw (A) tilt adjust on the ACE head ass'y.
4) Reconfirm the ACE head height.

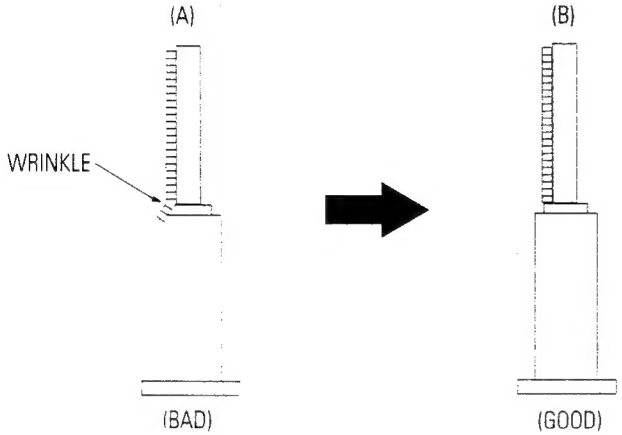

Fig. 2-12 Tape Guide Check

c. AUDIO AZIMUTH ADJUSTMENT

1) Load alignment tape (Mono scope) and playback the 7KHz signal.
2) Connect channel-1 scope probe to audio output.
3) Adjust screw (B) to achieve maximum audio level. (See Fig. 2-10)

d. ACE HEAD POSITION (X-POINT) ADJUSTMENT

1) Playback the alignment tape (Color bar)
2) Press the "TEST" botton on VCR MAIN PCB to set the adjustment mode. (See Fig. 2-2)
3) Press the "0, 5" remote control buttons, then adjustment is operates automatically. (See Fig. 2-1)
4) Connect the CH-1 probe to "Envelope" the CH-2 probe to "H'D switching pulse" and then trigger to CH-1.
5) Insert the (-) driver into the X-Point adjustment hole and adjust it so that envelope waveform is maximum.

Test point : W325 (Audio Output)
W324 (Envelope)
W323 (H'D S/W -Trigger)
W322 (Control Pulse)

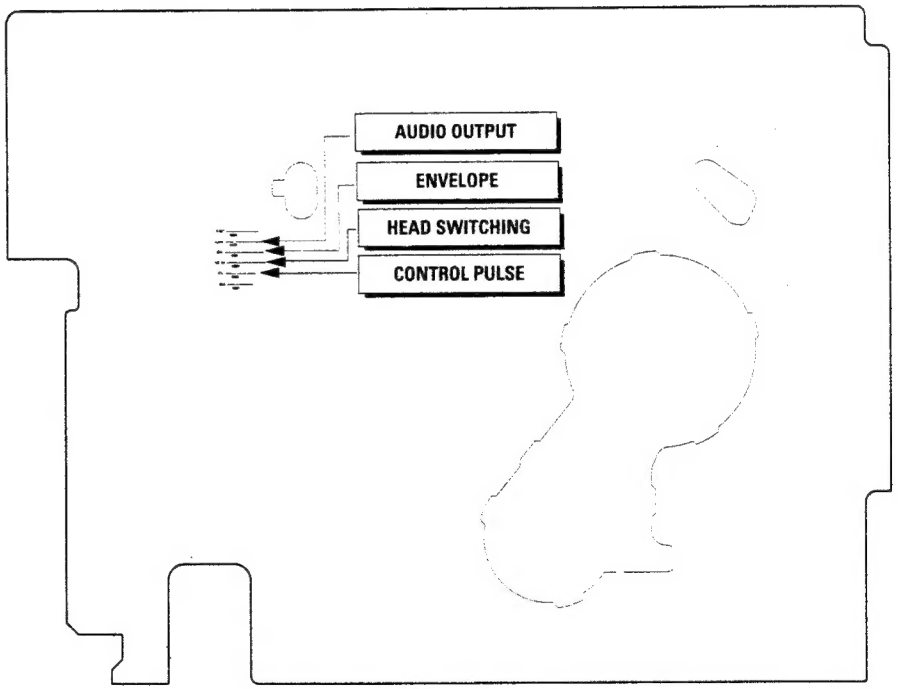

Fig. 2-13 Location of Test point (VCR Main PCB-Top View)

(2) Linearity adjustment (Guide roller S, T adjustment)

1) Playback the Mono Scope alignment tape (SP mode).
2) Observe the video envelope signal on an oscilloscope (triggered by the video switching pulse).
3) Make sure the video envelope waveform (at its minimum) meets the specification shown in Fig. 2-14.
   If it does not, adjust as follows :

Note :
a=Maximum output of the video RF envelope.
b=Minimum output of the video RF envelope at the entrance side.
c=Minimum output of the video RF envelope at the center point.
d=Maximum output of the video RF envelope at the exit side.

4) If the section A in Fig. 2-15 does not meet the specification, adjust the guide roller S up or down.
5) If the section B in Fig. 2-15 does not meet the specification, adjust the guide roller T up or down.

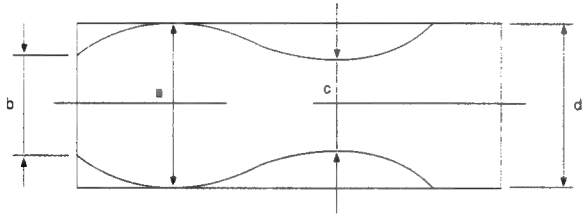

Fig. 2-14 Envelope Waveform Adjustment

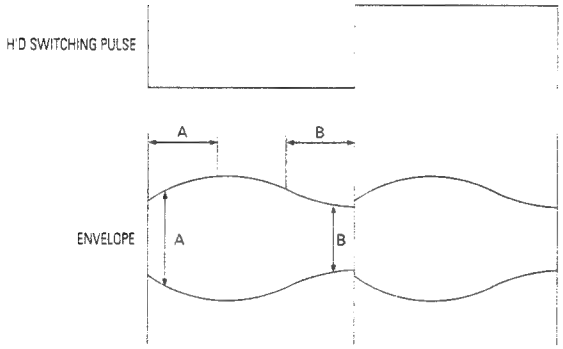

Fig. 2-15 Adjustment Points

6) Play back the Mono Scope alignment tape (SP mode).
7) Connect an oscilloscope CH-1 to the "Envelope" and CH-2 to the "H'D SW Pulse" for triggering.
8) Turn the guide roller heads with a flat head (▬) driver to obtain a flat video RF envelope as shown in Fig. 2-16.

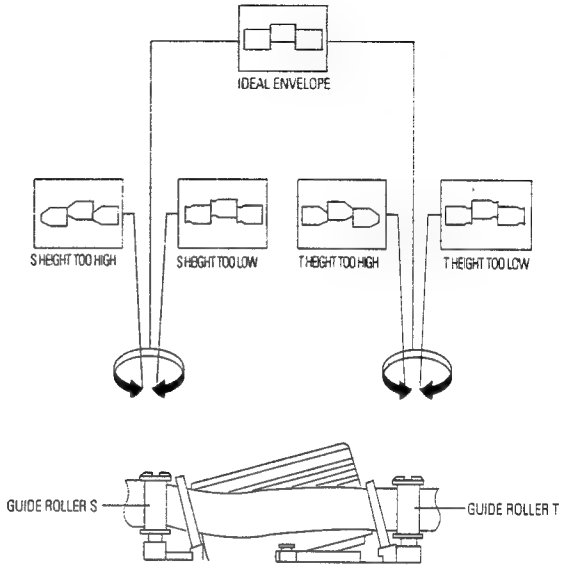

Fig. 2-16 Guide Roller S, T Height Adjustment

(3) Check Transitional Operation from RPS to Play

Check transition from RPS mode to play mode : Using a pre-recorded SP tape, make sure the entry side of envelope comes to an appropriate steady state within 3 seconds (as shown in Fig. 2-17).
If the envelope waveform does not reach specified peak-to peak amplitude within 3 seconds, adjust as follows :

1) Make sure there is no gap between the supply roller lower flange and the tape.
   If there is a gap, adjust the supply guide roller again.
2) Change operation mode from the RPS to the play mode (again) and make sure the entry side of envelope rises within 3 seconds.

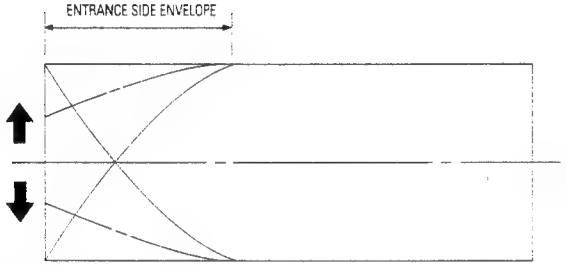

Fig. 2-17 Video Envelope Rising when Operation mode Changes from RPS to Play Mode

(4) Envelope Check

1) Make recordings on T-120 (E-120) and T-160 (E-180) tape.
   Make sure the playback output envelope meets the specification as shown in Fig. 2-18.
2) Play back a self recorded tape (recording made on the unit using with T-120 (E-120).
   The video envelope should meet the specification as shown in Fig. 2-18.
   In SP mode, (A) should equal (B).
   If the head gap is wide, upper cylinder should be checked.

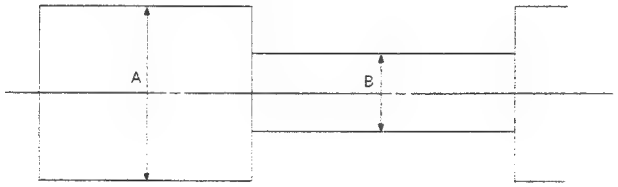

Fig. 2-18 Envelope Input and Output Level

(5) Tape Wrinkle Check

1) Run the T-160 (E-180) tape in the playback, FPS, RPS and Pause modes and observe tape wrinkle at each guide.
2) If excessive tape wrinkle is observed, perform the following adjustments in Playback mode :

- Tape wrinkle at the guide roller S, T section : Linearity adjustment.
- Tape wrinkle at tape guide flange : ACE head assembly coarse adjustment.

2-3-3 Reel Torque

1) The rotation of the capstan motor causes the holder clutch ass'y to rotate through the belt pulley.
2) The spring wrap PLAY/REV of holder clutch ass'y drives the disk reel S, T through gear idler by rotation of gear center ass'y.
3) Brake is operated by slider cam at FF/REW mode.
4) Transportation of accurate driving force is done by gears. (Gear Center Ass'y)

Note : If the spec. does not meet the followings specifications, replace the holder clutch ass'y and then recheck.

<Table 2-4>

MODE	TORQUE g/cm	GAUGE
PB	42 ± 11	Cassette Torquemeter
RPS	145 ± 30	Cassette Torquemeter

MEMO

3. Exploded View and Parts List

3-1 Cabinet Assembly ---------- 3-2
3-2 VCR Mechanical Parts (Top Side) ---------- 3-4
3-3 VCR Mechanical Parts (Bottom Side) ---------- 3-6
3-4 DVD Mechanical Parts ---------- 3-8

Notice

You can search for the updated part code through ITSELF web site.
URL; http://itself.sec.samsung.co.kr

3-1 Cabinet Assembly

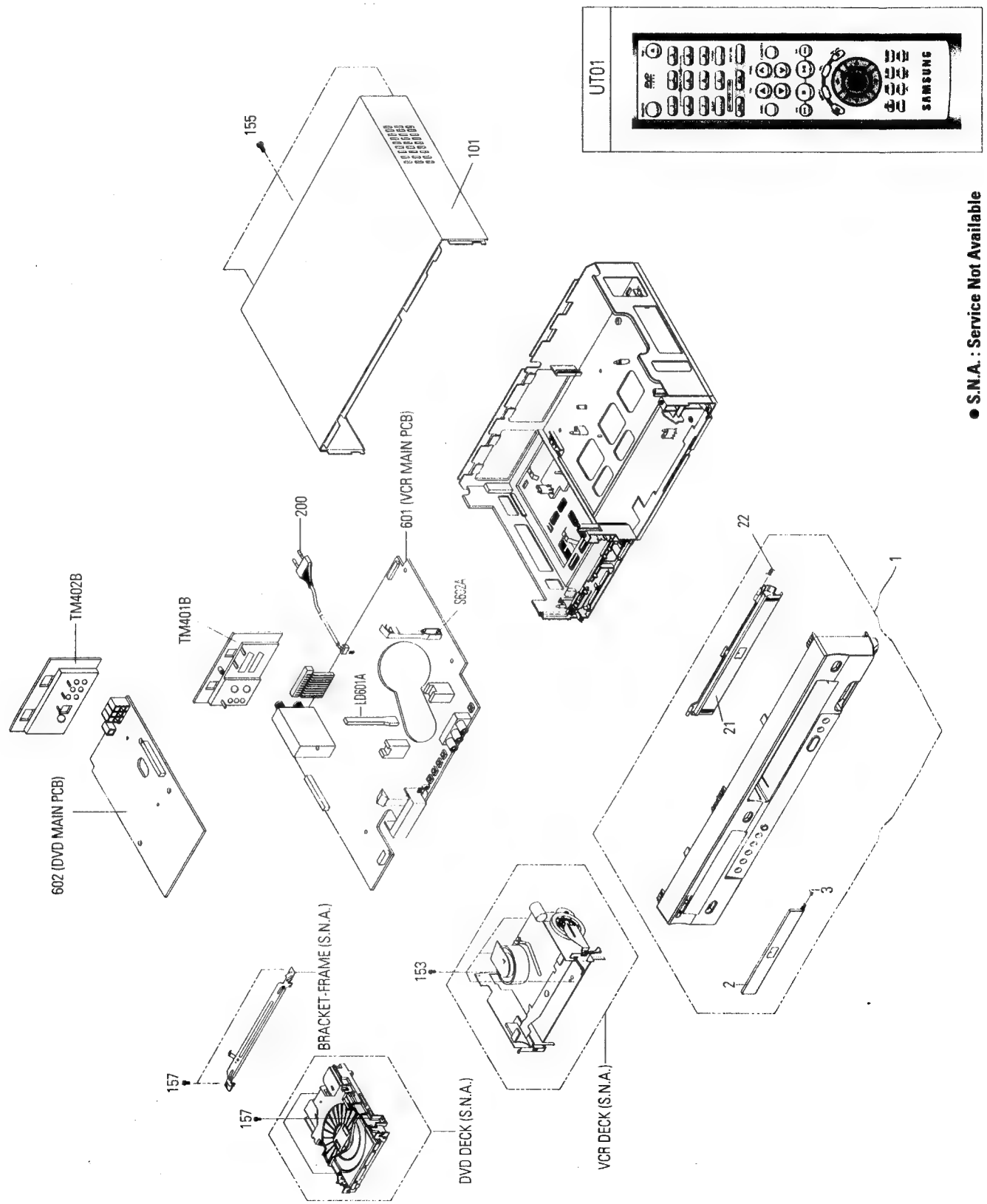

Loc. No	Parts No.	Description ; Specification	Remark
1	**Refer to table ; page 3-10**	ASSY-PANEL FRONT;	
2	**Refer to table ; page 3-10**	DOOR-TRAY;	
3	AK64-00551A	DOOR-SPRING;04-SNYCOM,SUS304,T0.32,H7.0,	
21	**Refer to table ; page 3-10**	DOOR-CASSETTE;	
22	AC61-62032A	SPRING ETC-MASK;SV-C130,SUS,4.4,-,-,-,-,	
101	AK64-00536B	CABINET-TOP;SV-DVD440,PCM,T0.5,W430,L223	
153	AC60-12126A	SCREW-BH;-,-,FE,FZY,BH,-,-,1*12,-,-	
155	6003-000275	SCREW-TAPTITE;BH,+,B,M3,L10,BLK ,SWCH101	
157	AC60-10063A	SCREW-TAPTITE;-,-,L12,ZPC3,-,-,M3,-,SWRC	
200	AC39-10019A	CBF POWER CORD;KKP-419C,H03VVH2-F,VDE/KE	Other Only
	AC39-12022K	CBF POWER CORD,Y352160,H03VVH2-F,-,BS650	U.K Only
601	**Refer to table ; page 3-10**	ASSY PCB-MAIN;	
602	**Refer to table ; page 3-10**	ASSY PCB-DVD;	
LD601A	AC61-00340A	HOLDER-LED;X-11,POM(K300),-,-,-,NTR,-	
S602A	AC61-00341A	HOLDER-TR;X-11,POM(K300),-,-,-,NTR,-	
TM401B	AK61-00320A	CONNECTOR BOARD;SV-DVD340/XEF,HIPS 94HB,	SV-DVD340/DVD-V340 Only
	AK61-00308A	CONNECTOR-BOARD VCR;SV-DVD440,HIPS 94HB,	Other Only
TM402B	AK97-00813B	ASSY-CONNECTOR BOARD;HIPS 94HB,SV-DVD440	SV-DVD340 Only
	AK97-00813A	ASSY-CONNECTOR BOARD;HIPS,SV-DVD540A/XEF	Other Only
	AK97-00814B	ASSY-CONNECTOR BOARD;HIPS 94HB,DVD-V340,	DVD-V340 Only
	AK97-00814A	ASSY-CONNECTOR BOARD;HIPS,DVD-V540/XSA,-	DVD-V540 Only
UT01	AK59-00008D	REMOCON-ASSY;SV-DVD50,SAMSUNG,-,-,44,-,-	SV-DVD340/DVD-V340 Only
	AK59-00008E	REMOCON;SV-DVD55,SAMSUNG,-,-,-,-,-,-,-	Other Only

3-2 VCR Mechanical Parts (Top Side)

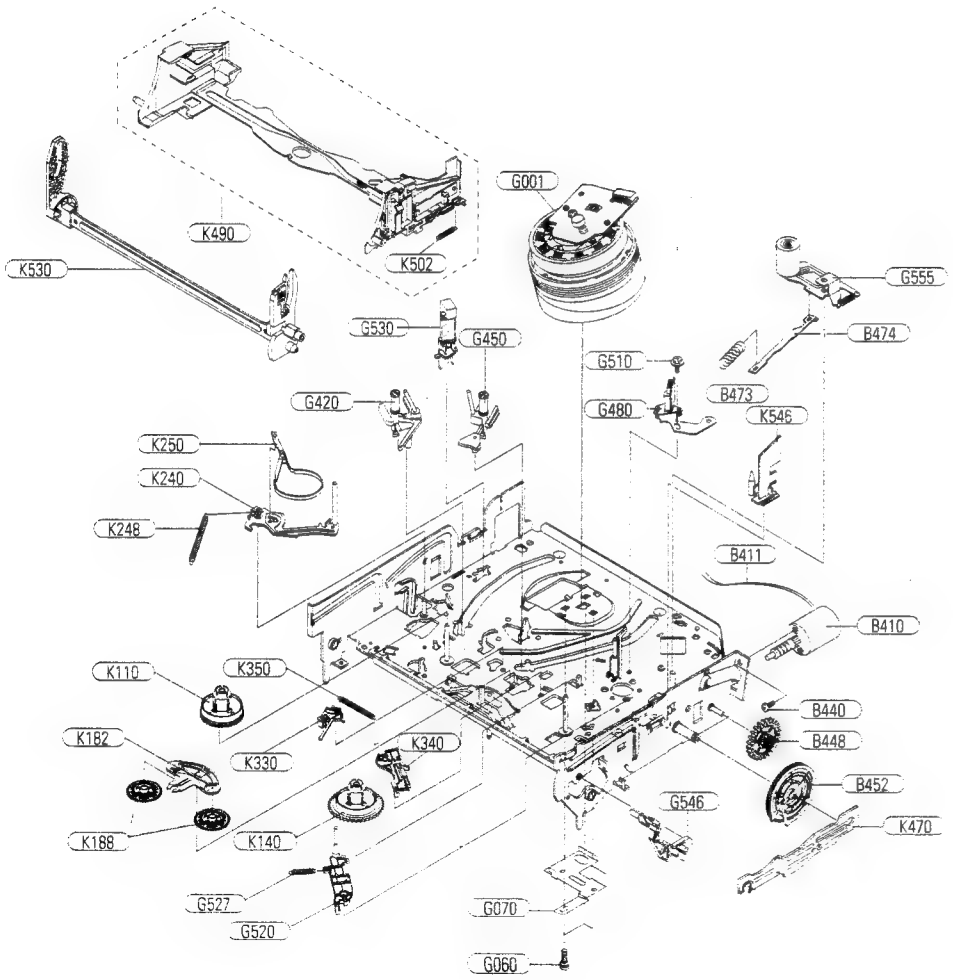

Loc. No	Parts No.	Description ; Specification	Remark
B410	AC97-02354A	ASSY-LOADING MOTOR;ASSY-LOADING MOTOR,	
B411	AC71-00004A	WIRE-LOADING;X-11,PVC+ WIRE,T0.38,0.88,	
B440	AC60-10515A	SCREW-MACHINE;-,-,M3,L3,PH,+,-,-,ZPC,-	
B448	AC66-00008A	GEAR-WORM WHEEL;TS-10,POM,0.8,40,-,NAT,3	
B452	AC66-00011A	GEAR-FL CAM;TS-10,POM,0.8,59,-,BLK,48.48	
B473	AC61-00105A	SPRING ETC-PINCH DRIVE;TS-10,SUS304-WPB,	
B474	AC61-30180A	PLATE-JOINT;X-9,SECC20/20,T0.8,-,-,-,-	
G001	AC97-02254A	ASSY-CLLINER;4P,CX11-SEM,FOR SLIM DECK	MONO Only
	AC97-02258A	ASSY-CLLINER;6S,CX11-SEM,FOR SLIM DECK	Hi-Fi Only
G060	6006-001092	SCREW-ASS'Y MACH;WS,PH,+,M3.0,L6.0,ZPC(Y	
G070	AC70-00002A	PLATE-GND DECK;X-11,SPTE,T0.3,-,-,-,-	
G420	AC66-80142A	SLIDER-SUPPLY ASSY;X-9,SUS,-,-,-,SIL,-	
G450	AC66-80141A	SLIDER-TAKE UP ASSY;X-9,SUS,-,-,-,SIL,-	
G480	AC97-01660A	ASSY-HEAD ACE;-,SCORPIO2(TS-10A),VTR-1*2	
G510	6006-001075	SCREW-ASS'Y TAPT;WSP,PH,+,M2.6,L5.0,ZPC(	
G520	AC66-00074A	LEVER-GUIDE(#9),TS-9,PPS,-,-,-,-,BLK,KHA	
G527	AC61-60553A	SPRING ETC-GUIDE 9;X-9,SUS304-WPB,0.25,-	
G530	AC33-00007A	HEAD-FE;-,-,HVFHP0043A,-,-	
G546	AC66-00005A	LEVER-FL DOOR;TS-10,POM,-,-,-,-,NAT,-	
G555	AC97-02293A	ASSY-UNIT PINCH;SECC+SUS304,TS-10,FOR X-	
G560	AC97-02215A	ASSY-POST #8 GUIDE;SUS303+POM(M90-44)EQ,	
K110	AC66-10267A	REEL-DISK S;X-9,POM,-,-,-,-,-,-	
K140	AC66-10268A	REEL-DISK T;X-9,POM,-,-,-,-,-,-	
K182	AC66-30524A	LEVER-IDLER;-,POM,-,-,-,-,BLK,-	
K188	AC66-00039A	GEAR-IDLE;TS-10,PET K3372,0.5,-,-,NTR,28	
K240	AC66-00035A	LEVER-TENSION ASS'Y;TS-10,SECC E20/20+SU	
K248	AC61-00107A	SPRING ETC-TENSION LEVER;TS-10,SUS304-WP	
K250	AC69-00104A	BAND-BRAKE ASS'Y;TS-10,-,-,-,-,-,-	
K330	AC66-30550A	LEVER-S.BRAKE ASSY;-,POM+SUS,-,-,-,X-9	
K340	AC66-30549A	LEVER-T.BRAKE ASSY;-,POM+SUS,-,-,-,X-9	
K350	AC61-00106A	SPRING ETC-BRAKE;TS-10,SUS304-WPB,-,-,-,	
K470	AC66-00020A	SLIDER-FL DRIVE;TS-10,SECC ,T1.0,-,-,SIL	
K490	AC61-00120A	HOLDER-FL CASS. ASS'Y;TS-10,-,-,-,-,-,-	
K502	AC61-60561A	SPRING ETC-FL.LEVER-LR;X-9,SUS304 WPB,OD	
K530	AC66-00034A	LEVER-FL ARM ASS'Y;TS-10,-,-,-,-,-,-,-	
K546	AC61-50658A	GUIDE-CASS. DOOR;X-9,POM,-,-,-,NTR	

3-3 VCR Mechanical Parts (Bottom Side)

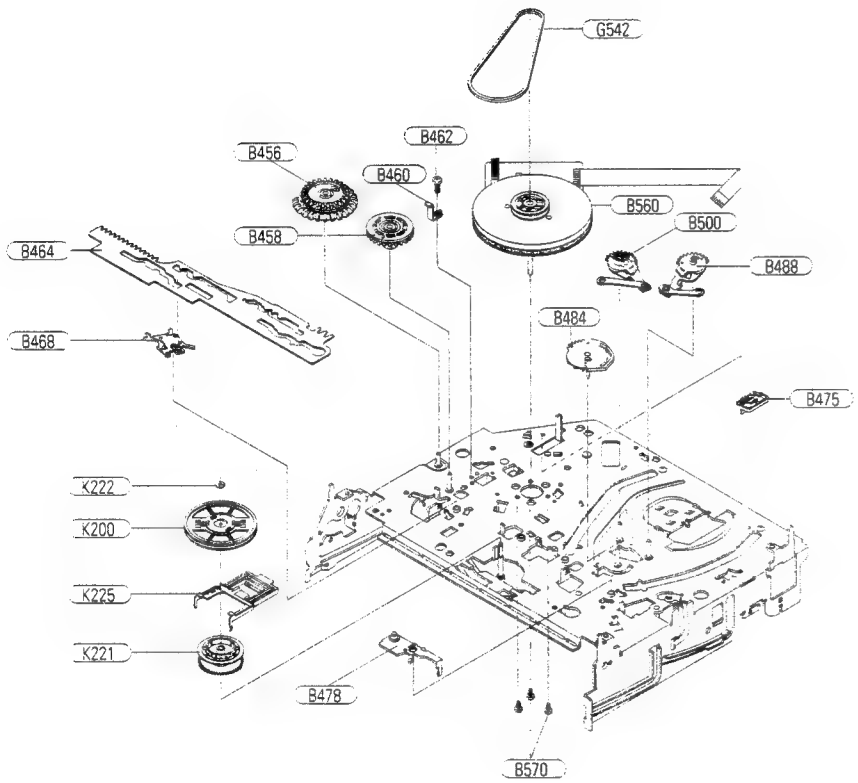

Loc. No	Parts No.	Description ; Specification	Remark
B456	AC66-00076A	GEAR-JOINT 1;X-11,POM(K300),-,-,-,BLUE,-	
B458	AC66-00077A	GEAR-JOINT 2;X-11,POM(K300),-,-,-,BLUE,-	
B460	AC61-00338A	BRACKET-GEAR;X-11,SECC,T0.8,W20,L20,NTR,	
B462	AC60-10517A	SCREW-TAP TITE;-,-,M2.6,L5,PH,-,-,-,ZPC,	
B464	AC66-00075A	SLIDER-CAM;X-11,SECC ,T1.2,-,-,SIL,-	
B468	AC66-00017A	LEVER-PINCH DRIVE;TS-10,SECC E20/20,1.0	
B475	AC66-00085A	DAMPER-CAPSTAN;X-11,POM(M90-44),-,-,-,-	
B478	AC66-00016A	LEVER-TENSION DRIVE;TS-10,SECC E20/20,1	
B484	AC66-00078A	GEAR-LOADING DRIVE;X-11,POM(K300),-,-,-	
B488	AC97-02195A	ASSY-LEVER LOADING S;SECC+POM+SUS,X-11,F	
B500	AC97-02196A	ASSY-LEVER LOADING T;SECC+POM+SUS,X-11,F	
B560	AC81-00004A	MOTOR-CAPSTAN;THRUST END PLAY-0.2,MR-FG	
B570	AC60-10514A	SCREW-CAPSTAN;-,-,M2.6,L6,PH,+,-,-,-,-	
G542	AC66-60051A	BELT-PULLEY;-,5CM-70,2 * 2,-,71.3,-,X-9	
K200	AC61-21012A	HOLDER-CLUTCH ASSY;X-9,ABS,-,-,-,BLK,-	
K221	AC66-20581A	GEAR-CENTER ASSY;X-9,POM,M=0.5,-,-,GRY,-	
K222	AC60-30306A	FASTENER-WASHER SLIT;-,-,ID2.1,OD5.0,T0.	
K225	AC66-00006A	LEVER-UP DOWN;TS-10,POM,-,-,-,-,NAT,-	

3-4 DVD Mechanical Parts

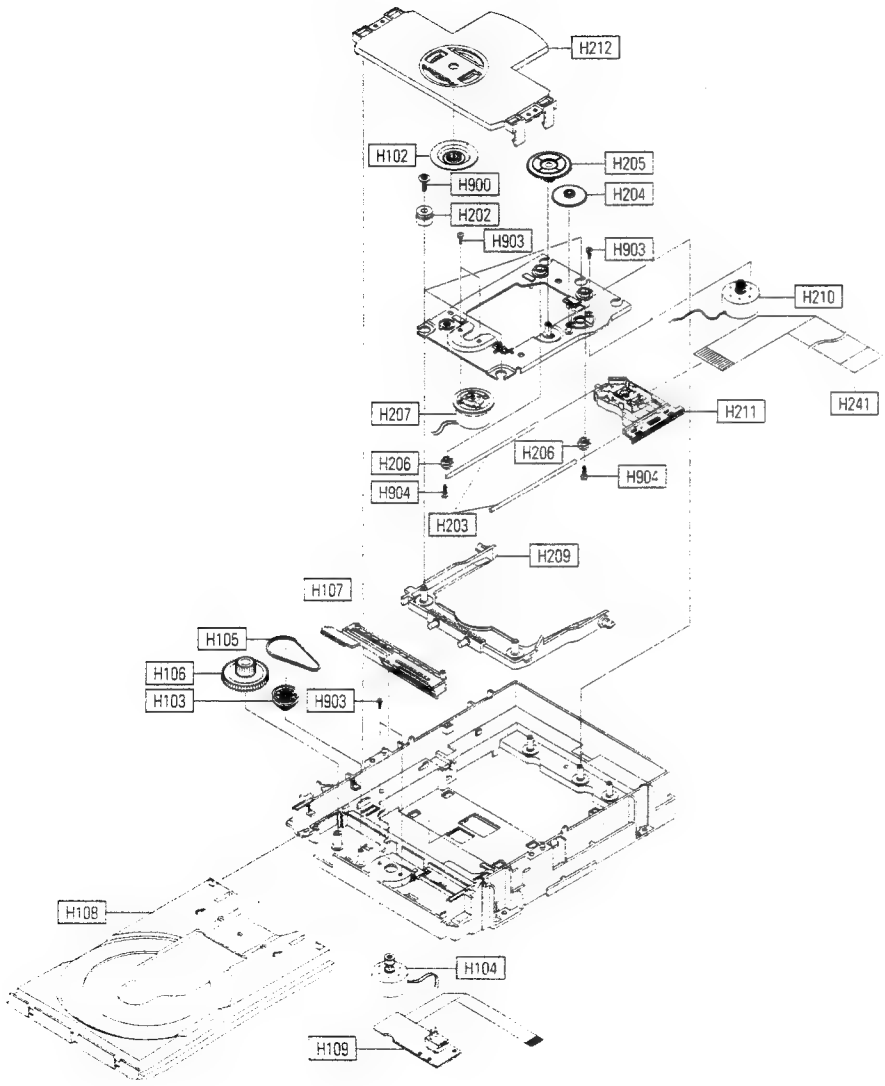

Loc. No	Parts No.	Description ; Specification	Remark
H102	AH66-00111B	CLAMPER-ASSY;DP-5,POM,-,-,-,-,BLK,-	
H103	AK66-00042A	GEAR-PULLEY;DP-15,POM,-,-,-,WHT,-,-,-	
H104	AK97-00608A	ASSY-MOTOR LOAD;-,DP-15,-	
H105	6602-001076	BELT-RECTANGULAR;CR,T1.2,4.3%,1.2X25.1,B	
H106	AK66-00041A	GEAR-TRAY;DP-15,POM,-,-,-,WHT,-,-,-	
H107	AK66-00045A	SLIDER HOUSING;DP-15,POM,-,W17.8,L90,WHT	
H108	AK63-00101B	TRAY-DISC;DP-15,ABS,-,W120,L186.3,-,GRY,	
H109	AK92-00328B	ASSY PCB-DECK;DP-15,COMBO	
H202	AK73-00005B	RUBBER-INSULATOR;DP-15,BUTYL,•'12,HS30,H	
H203	AH61-50327A	SHAFT-P/U;DP-3,SUS,L84.7,OD3,-,-,-	
H204	AK66-00043A	GEAR-FEED A;DP-15,POM,-,-,-,-,-,-,-	
H205	AK66-00044A	GEAR-FEED B;DP-15,POM,-,-,-,-,-,-,-	
H206	AK61-00032A	HOLDER-CAM SKEW;DP-9,POM,-,-,-,BLACK,-	
H207	AK31-00014A	MOTOR SPINDLE;DP-15,3000RPM,-,-,-,-	
H209	AK64-00491A	CHASSIS SUB;DP-15,POM,-,-,-,-,-	
H210	AK31-00005A	MOTOR-FEED ASSY;-,DP-9,-,-,-,-,-,-,-,-,-	
H211	AK97-00638A	ASSY-PICK UP;-,SOH-DT2,TRINO ASSY PICK U	
H212	AK61-00253A	HOLDER-CHUCK;DP-15,POM,-,-,-,-,-	
H241	AK41-00156B	FFC-PU;DP-15,-,FFC,24,T0.3,RIGHT	
H900	6003-001157	SCREW-TAPTITE;PWH,+,B,M2,L6,ZPC(YEL),SWR	
H903	6001-001370	SCREW-MACHINE;CH,+,M1.7,L3.0,ZPC(YEL),SW	
H904	6002-001086	SCREW-TAPPING;PH,+,B,M1.7,L5.0,ZPC(YEL),	

MODELS	1	2	Z1	601	602
SV-DVD340/XEF	AK97-00717B	AK64-00557A	AK64-00556C	AC92-01553P	AK92-00414A
SV-DVD540A/XEF	AK97-00504T	AK64-00369B	AK64-00368D	AC92-01553A	AK92-00247D
SV-DVD545/XEF	AK97-00542K	AK64-00433D	AK64-00432D	AC92-01553H	AK92-00247D
SV-DVD640/XEF	AK97-00504W	AK64-00369B	AK64-00368F	AC92-01553A	AK92-00436A
SV-DVD340/XEB	AK97-00717B	AK64-00557A	AK64-00556C	AC92-01553P	AK92-00414A
SV-DVD540A/XEB	AK97-00504T	AK64-00369B	AK64-00368D	AC92-01553A	AK92-00247D
SV-DVD545/XEB	AK97-00542K	AK64-00433D	AK64-00432D	AC92-01553H	AK92-00247D
SV-DVD640/XEB	AK97-00504W	AK64-00369B	AK64-00368F	AC92-01553A	AK92-00436A
SV-DVD340/XEU	AK97-00717C	AK64-00557A	AK64-00556C	AC92-01553Q	AK92-00414A
SV-DVD540A/XEU	AK97-00504U	AK64-00369B	AK64-00368D	AC92-01553B	AK92-00247D
SV-DVD545/XEU	AK97-00542J	AK64-00433D	AK64-00432E	AC92-01553J	AK92-00247D
SV-DVD640/XEU	AK97-00504X	AK64-00369B	AK64-00368F	AC92-01553B	AK92-00436A
SV-DVD340/XEUI	AK97-00717C	AK64-00557A	AK64-00556C	AC92-01553S	AK92-00414A
SV-DVD540A/XEUI	AK97-00504U	AK64-00369B	AK64-00368D	AC92-01553C	AK92-00247D
SV-DVD545/XEUI	AK97-00542J	AK64-00433D	AK64-00432E	AC92-01553K	AK92-00247D
SV-DVD640/XEUI	AK97-00504X	AK64-00369B	AK64-00368F	AC92-01553C	AK92-00436A
SV-DVD340/XEN	AK97-00717C	AK64-00557A	AK64-00556C	AC92-01553S	AK92-00414A
SV-DVD540A/XEN	AK97-00504U	AK64-00369B	AK64-00368D	AC92-01553C	AK92-00247D
SV-DVD545/XEN	AK97-00542J	AK64-00433D	AK64-00432E	AC92-01553K	AK92-00247D
SV-DVD640/XEN	AK97-00504X	AK64-00369B	AK64-00368F	AC92-01553C	AK92-00436A
SV-DVD340/XEC	AK97-00717C	AK64-00557A	AK64-00556C	AC92-01553S	AK92-00414A
SV-DVD540A/XEC	AK97-00504U	AK64-00369B	AK64-00368D	AC92-01553C	AK92-00247D
SV-DVD545/XEC	AK97-00542J	AK64-00433D	AK64-00432E	AC92-01553K	AK92-00247D
SV-DVD640/XEC	AK97-00504X	AK64-00369B	AK64-00368F	AC92-01553C	AK92-00436A
SV-DVD340/XEE	AK97-00717C	AK64-00557A	AK64-00556C	AC92-01553S	AK92-00414A
SV-DVD540A/XEE	AK97-00504U	AK64-00369B	AK64-00368D	AC92-01553C	AK92-00247D
SV-DVD545/XEE	AK97-00542J	AK64-00433D	AK64-00432E	AC92-01553K	AK92-00247D
SV-DVD640/XEE	AK97-00504X	AK64-00369B	AK64-00368F	AC92-01553C	AK92-00436A
SV-DVD340/XEG	AK97-00717C	AK64-00557A	AK64-00556C	AC92-01553S	AK92-00414A
SV-DVD540A/XEG	AK97-00504U	AK64-00369B	AK64-00368D	AC92-01553D	AK92-00247D
SV-DVD545/XEG	AK97-00542J	AK64-00433D	AK64-00432E	AC92-01553L	AK92-00247D
SV-DVD640/XEG	AK97-00504X	AK64-00369B	AK64-00368F	AC92-01553D	AK92-00436A
SV-DVD340/COM	AK97-00717C	AK64-00557A	AK64-00556C	AC92-01553S	AK92-00414A
SV-DVD540A/COM	AK97-00504U	AK64-00369B	AK64-00368D	AC92-01553D	AK92-00247D
SV-DVD545/COM	AK97-00542J	AK64-00433D	AK64-00432E	AC92-01553L	AK92-00247D
SV-DVD640/COM	AK97-00504X	AK64-00369B	AK64-00368F	AC92-01553D	AK92-00436A
SV-DVD340/XET	AK97-00717C	AK64-00557A	AK64-00556C	AC92-01553S	AK92-00414A
SV-DVD540A/XET	AK97-00504U	AK64-00369B	AK64-00368D	AC92-01553D	AK92-00247D
SV-DVD545/XET	AK97-00542J	AK64-00433D	AK64-00432E	AC92-01553L	AK92-00247D
SV-DVD640/XET	AK97-00504X	AK64-00369B	AK64-00368F	AC92-01553D	AK92-00436A
SV-DVD340/EUR	AK97-00717C	AK64-00557A	AK64-00556C	AC92-01553U	AK92-00414A
SV-DVD540A/EUR	AK97-00504U	AK64-00369B	AK64-00368D	AC92-01553E	AK92-00247D
SV-DVD545/EUR	AK97-00542J	AK64-00433D	AK64-00432E	AC92-01553N	AK92-00247D
SV-DVD640/EUR	AK97-00504X	AK64-00369B	AK64-00368F	AC92-01553E	AK92-00436A
SV-DVD340/XEO	AK97-00717C	AK64-00557A	AK64-00556C	AC92-01553U	AK92-00414A
SV-DVD540A/XEO	AK97-00504U	AK64-00369B	AK64-00368D	AC92-01553E	AK92-00247D
SV-DVD545/XEO	AK97-00542J	AK64-00433D	AK64-00432E	AC92-01553N	AK92-00247D
SV-DVD640/XEO	AK97-00504X	AK64-00369B	AK64-00368F	AC92-01553E	AK92-00436A
DVD-V340/FES	AK97-00883C	AK64-00369A	AK64-00368A	AC92-01553W	AK92-00416A
DVD-V540/FES	AK97-00801F	AK64-00369B	AK64-00368G	AC92-01553G	AK92-00413A
DVD-V340/AFR	AK97-00883D	AK64-00369A	AK64-00368A	AC92-01553V	AK92-00416A
DVD-V540/AFR	AK97-00801E	AK64-00369B	AK64-00368G	AC92-01553F	AK92-00413A

4. Electrical Parts List

Loc.No	Part No	Description ; Specification	Remark
601		ASSY PCB-MAIN;SV-DVD340	SV-DVD340 Only
S.M.P.S. PARTS			
BD1SD1	AC27-92001M	COIL-INDUCTOR,FH3.5X6.5RS,BEAD/RADIAL,-	
BD1SD2	AC27-92001M	COIL-INDUCTOR,FH3.5X6.5RS,BEAD/RADIAL,-	
BD1SS3	AC27-92001M	COIL-INDUCTOR,FH3.5X6.5RS,BEAD/RAC ALL-	
C1SD12	2305-001029	C-FILM,LEAD-PET,10nF,10%,630V,TP,12x8x12	
C1SD13	2301-000393	C-FILM,LEAD-PET,10nF,5%,50V,TP,6x7x3.2mm	
C1SD16	2201-000129	C-CERAMIC,DISC,3.1NF,10%,1KV,Y5P,TP,7X4M	
C1SF02	2401-000668	C-AL,33uF,20%,35V,GP,TP,5x11,5	
C1SS01	2301-001157	C-FILM,LEAD-PET,47nF,10%,275V,BK,17.5x12	⚠
C1SS02	2301-001157	C-FILM,LEAD-PET,47nF,10%,275V,BK,17.5x12	⚠
C1SS03	2201-002044	C-CERAMIC,DISC,0.1NF,10%,400V,Y5P,TP,9.5	⚠
C1SS05	2201-002044	C-CERAMIC,DISC,0.1NF,10%,400V,Y5P,TP,9.5	⚠
C1SS06	2201-002044	C-CERAMIC,DISC,0.1NF,10%,400V,Y5P,TP,9.5	⚠
C1SS10	2401-000303	C-AL,82uF,20%,400V,GP,BK,22X30,10	
C1SS11	2401-000598	C-AL,1uF,20%,50V,SP,TP,4x7,5	
C1SS12	2401-002299	C-AL,4.7uF,20%,50V,GP,TP,5x7,5	
C1SS15	2401-001992	C-AL,2200UF,20%,10V,WT,TP,10X20MM,5	
C1SS16	2401-000480	C-AL,1000UF,20%,,16V,LZ,TP,10X16MM,5	
C1SS17	2401-001992	C-AL,2200UF,20%,10V,WT,TP,10X20MM,5	
C1SS18	2401-001992	C-AL,2200UF,20%,,10V,WT,TP,10X20MM,5	
C1SS19	2401-000385	C-AL,10uF,20%,,100V,GP,TP,6.3x11,5	
C1SS27	2401-001126	C-AL,330uF,20%,,25V,WT,TP,10x12.5,5	
C1SS22	2401-001126	C-AL,330uF,20%,,25V,WT,TP,10x12.5,5	
C1SS26	2401-001126	C-AL,330uF,20%,,25V,WT,TP,10x12.5,5	
C1SS27	2301-000129	C-FILM,LEAD-PET,10nF,5%,50V,TP,10X5X4.3	
CN01	3711-005665	CONNECTOR-HEADER,NOWALL,24P,12.2mm,STRAI	
CN1SS1	3711-000178	CONNECTOR-HEADER,1WALL,2P,18.0,96mm,STRA	
D1SF01	0401-000101	DIODE-SWITCHING,1N4148,75V,150MA,DO-35,T	
D1SF02	3402-001195	DIODE-RECTIFIER,FR174,400V,1A,DO-204AC,TP	
D1SS01	0402-001196	DIODE-RECTIFIER,ITS,600V,1A,TS-1,TP	
D1SS02	0402-001196	DIODE-RECTIFIER,ITS,600V,1A,TS-1,TP	
D1SS03	3402-001196	DIODE-RECTIFIER,ITS,600V,1A,TS-1,TP	
D1SS04	3402-001196	DIODE-RECTIFIER,ITS,600V,1A,TS-1,TP	
D1SS11	3402-000012	DIODE-RECTIFIER,UF4007,1KV,1A,DO-41,TP	
D1SS12	3404-001225	DIODE-SCHOTTKY,SRAF560,60V,5000mA,TO-22	
D1SS13	0404-001225	DIODE-SCHOTTKY,SRAF560,60V,5000mA,TO-22	
D1SS14	3404-001225	DIODE-SCHOTTKY,SRAF560,60V,5000mA,TO-22	
D1SS15	3402-001195	DIODE-RECTIFIER,FR174,400V,1A,DO-204AC,TP	
D1SS16	3402-001194	DIODE-RECTIFIER,UG20,200V,2A,-,TP	
F1SS01	3601-001123	FUSE-CARTRIDGE,250V,1.6A,TIME-LAG,CERAMI	⚠
FL1A01	2702-000166	INDUCTOR-RAC,AL,47uH,5%,6.0x6.4mm	
FZD1	3601-001240	FUSE-RADIAL LEAD,50V,1A,-,-,5.0x4.0x5.0m	
FZD2	3601-001240	FUSE-RADIAL LEAD,50V,1A,-,-,5.0x4.0x5.0m	
IC1SS2	3604-001029	PHOTO-COUPLER,TR,50-600%,250mW,DIP-4,ST	⚠
IC1SS2	AC14-12006G	IC,KA431Z,TO-92,TAPING	
IC1SS2	1203-002805	IC-PWM CONTROLLER,ICE2BS01,PDIP-8P,9.52X	
L1SS01	AC29-00002A	FILTER LINE NOISE-,-,30mH,-,-,BLS-2216	
L1SS02	AC29-00003A	FILTER LINE NOISE-,-,20mH MIN,-,-,-	⚠
L1SS03	AC27-12001N	COIL CHOKE,10UH-15%,RA,K-30,G80,150KHZ,-	
L1SS04	AC27-12001N	COIL CHOKE,10UH-15%,RA,K-30,G80,150KHZ,-	
L1SS05	AC27-12001N	COIL CHOKE,10UH-15%,RA,K-30,G80,150KHZ,-	
PT1SD1	AC25-00012J	TRANS SWITCHING,EER-3126,SLV-D950E,-,-,-	⚠
R1SD11	2006-000273	R-CEMENT,27KOHM,5%,2W,CA,BK,5.4X6.5X18M	
R1SD13	2006-000273	R-CEMENT,27KOHM,5%,2W,CA,BK,5.4X6.5X18M	
R1SD14	2001-000598	R-CARBON,3.3OHM,5%,1/8W,AA,TP,1.8X3.2MM	
R1SF05	2001-000527	R-CARBON,22OHM,5%,1/8W,AA,TP,1.8X3.2MM	
R1SF06	2004-000459	R-METAL,2.2Kohm,1%,1/8W,AA,TP,1.8x3.2m	
R1SF07	2063-000105	R-METAL OXIDE,0.33ohm,5%,2W,AD,TP,5x16mm	

Loc.No	Part No	Description ; Specification	Remark
R1SG11	2001-000281	R-CARBON,100OHM,5%,1/8W,AA,TP,1.8X3.2MM	
R1SR01	2001-000548	R-CARBON,270KOHM,5%,1/8W,AA,TP,1.8X3.2M	
R1SR02	2001-000548	R-CARBON,270KOHM,5%,1/8W,AA,TP,1.8X3.2M	
R1SR03	2001-000548	R-CARBON,270KOHM,5%,1/8W,AA,TP,1.8X3.2M	
R1SS01	2006-000252	R-CEMENT,2.7ohm,10%,2W,CB,TP,5x11x20,	
R1SS08	2001-000793	R-CARBON,47OHM,5%,1/8W,AA,TP,1.8X3.2MM	
R1SS31	2001-000790	R-CARBON,470OHM,5%,1/8W,AA,TP,1.8X3.2MM	
R1SS32	2001-000429	R-CARBON,1KOHM,5%,1/8W,AA,TP,1.8X3.2MM	
R1SS33	2001-000429	R-CARBON,1KOHM,5%,1/8W,AA,TP,1.8X3.2MM	
R1SS34	2004-000869	R-METAL,3Kohm,1%,1/8W,AA,TP,1.8x3.2mm	
R1SS35	2004-000459	R-METAL,2.2Kohm,1%,1/8W,AA,TP,1.8x3.2m	
ZD1SS1	2403-000713	DIODE-ZENER,MTZ,29B,19.83-17.7V,500MW,DO	
ZD1SS2	2403-001318	DIODE-ZENER,MTZ,4.3B,4.17-4.43V,500MW,DO	
POWER DRIVER PARTS			
C1P101	2401-000480	C-AL,1000UF,20%,,16V,LZ,TP,10X16MM,5	
C1P102	2401-000336	C-AL,4.7UF,20%,,50V,SP,TP,5X5,2	
C1P103	2401-002226	C-AL,10UF,20%,,35V,SP,TP,5X5,2.5	
C1P104	2401-000588	C-AL,1uF,20%,,50V,GP,TP,3x6,2.5	
C1P105	2401-000336	C-AL,4.7UF,20%,,50V,SP,TP,5X5,2	
C1P106	2401-000463	C-AL,10UF,20%,,35V,GP,-,5X5,5	
C1P107	2401-002299	C-AL,4.7uF,20%,,50V,GP,TP,5x7,5	
C1P109	2401-000414	C-AL,10uF,20%,,16V,GP,TP,4x7,5	
C1P110	2401-000414	C-AL,10uF,20%,,16V,GP,TP,4x7,5	
C1P111	2401-000463	C-AL,10UF,20%,,35V,GP,-,5X5,5	
C1P112	2401-002299	C-AL,4.7uF,20%,,50V,GP,TP,5x7,5	
C1P113	2401-000598	C-AL,1uF,20%,,50V,GP,TP,4x7,5	
C1P114	2401-002165	C-AL,100uF,20%,,16V,GP,TP,6.3x7,5	
C1P115	2401-002165	C-AL,100uF,20%,,16V,GP,TP,6.3x7,5	
C1P116	2401-002299	C-AL,4.7uF,20%,,50V,GP,TP,5x7,5	
D1P104	3401-000101	DIODE-SWITCHING,1N4148,75V,150MA,DO-35,T	
D1P105	3401-000101	DIODE-SWITCHING,1N4148,75V,150MA,DO-35,T	
D1P106	3401-000101	DIODE-SWITCHING,1N4148,75V,150MA,DO-35,T	
D1P107	3401-000101	DIODE-SWITCHING,1N4148,75V,150MA,DO-35,T	
D1P108	3401-000101	DIODE-SWITCHING,1N4148,75V,150MA,DO-35,T	
D1P130	3402-000127	DIODE-RECTIFIER,1N4002,100V,1A,DO-41,TP	
L1P102	AC27-12001N	COIL CHOKE,10UH-15%,RA,K-30,G80,150KHZ,-	
Q1P101	3501-000362	TR-SMALL SIGNAL,KSC2328A-Y,NPN,,120MW,TO	
Q1P102	3504-000142	TR-DIGITAL,KSR2201,PNP,300MW,4.7K,4.7K,T	
Q1P103	3501-000398	TR-SMALL SIGNAL,KSC945,NPN,,250mW,TO-92,T	
Q1P104	3501-000362	TR-SMALL SIGNAL,KSC2328A-Y,NPN,,120MW,TO	
Q1P105	3501-000362	TR-SMALL SIGNAL,KSC2328A-Y,NPN,,120MW,TO	
Q1P106	3501-000362	TR-SMALL SIGNAL,KSC2328A-Y,NPN,,120MW,TO	⚠
Q1P107	3501-000362	TR-SMALL SIGNAL,KSC2328A-Y,NPN,,120MW,TO	
Q1P108	3504-000142	TR-DIGITAL,KSR2201,PNP,300MW,4.7K,4.7K,T	
Q1P109	3501-000398	TR-SMALL SIGNAL,KSC945,NPN,,250mW,TO-92,T	
Q1P110	3501-000362	TR-SMALL SIGNAL,KSC2328A-Y,NPN,,120MW,TO	
Q1P111	3501-000362	TR-SMALL SIGNAL,KSC2328A-Y,NPN,,120MW,TO	
R1P101	2061-000855	R-CARBON,560OHM,5%,1/4W,AA,TP,,6X8.4MM	
R1P103	2007-000402	R-CHIP,150ohm,5%,1/10W,TP,1608	
R1P104	2001-000449	R-CARBON,2.2KOHM,5%,1/8W,AA,TP,1.8X3.2M	
R1P105	2001-000969	R-CARBON,750HM,5%,1/8W,AA,TP,1.8X3.2MM	
R1P109	2001-000362	R-CARBON,150OHM,5%,1/8W,AA,TP,1.8X3.2MM	
R1P110	2001-000449	R-CARBON,2.2KOHM,5%,1/8W,AA,TP,1.8X3.2M	
R1P111	2061-000952	R-CARBON,470OHM,5%,1/4W,AA,TP,,6X8.4MM	
R1P112	2001-000302	R-CARBON,100HM,5%,1/8W,AA,TP,1.8X3.2MM	
R1P122	2007-000134	R-CHIP,33Kohm,5%,,1/10W,TP,1608	
ZD1P02	2403-001211	DIODE-ZENER,MTZ,12B,11.8-12.2V,500MW,DO-	
ZD1P03	2403-000729	DIODE-ZENER,MTZ,9.1B,8.57-9.01V,500MW,DO	
ZD1P04	2403-000717	DIODE-ZENER,MTZ,5.1B,4.94-5.2V,500MW,DO-	
ZD1P05	2403-001211	DIODE-ZENER,MTZ,12B,11.8-12.2V,500MW,DO-	

This Document can not be used without Samsung's authorization

Electrical Parts List

ZD1P06	0403-000717	DIODE-ZENER;MTZJ5.1B,4.94-5.2V,500MW,DO-	
SYSTEM CONTROL/SERVO PARTS			
C601	2203-002396	C-CER,CHIP;22nF,10%,50V,X7R,TP,1608	
C602	2401-002095	C-AL;47uF,20%,25V,GP,TP,5.3x5.5	
C605	2203-000257	C-CER,CHIP;10nF,10%,50V,X7R,TP,1608	
C606	2203-000257	C-CER,CHIP;10nF,10%,50V,X7R,TP,1608	
C607	2401-000118	C-AL;1000uF,20%,10V,GP,TP,10x12.5.5	
C607A	2401-000107	C-AL;47uF,20%,16V,GP,TP,5x7.5	
C608	2401-002259	C-AL;0.1F,+80-20%,,5.5V,-,TP,1	BACK-UP 1HOUR Only
C610	2202-002037	C-CERAMIC,MLC-AXIAL;100nF,80-20%,,50V,Y5V	
C618	2401-000360	C-AL;100uF,20%,50V,GP,TP,8x11.5,5	
C618A	2401-002095	C-AL;47uF,20%,25V,GP,TP,6.3x5.5	
C619	2203-000257	C-CER,CHIP;10nF,10%,50V,X7R,TP,1608	
C620	2401-001543	C-AL;47uF,20%,25V,GP,TP,5.3x5mm,2.5	
C621	2203-000257	C-CER,CHIP;10nF,10%,50V,X7R,TP,1608	
C623	2203-000257	C-CER,CHIP;10nF,10%,50V,X7R,TP,1608	
C624	2203-000626	C-CER,CHIP;0.022nF,5%,50V,C0G	BACK-UP 1HOUR Only
C625	2203-000626	C-CER,CHIP;0.022nF,5%,50V,C0G	BACK-UP 1HOUR Only
C626	2203-000626	C-CER,CHIP;0.022nF,5%,50V,C0G,TP,1608	
C627	2203-000626	C-CER,CHIP;0.022nF,5%,50V,C0G,TP,1608	
C628	2203-000681	C-CER,CHIP;0.027NF,5%,50V,C0G,TP,1608	
C633	2203-000257	C-CER,CHIP;10nF,10%,50V,X7R,TP,1608	
C635	2203-000491	C-CER,CHIP;2.2nF,10%,,50V,X7R,TP,1608,-	
C636	2203-000491	C-CER,CHIP;2.2nF,10%,,50V,X7R,TP,1608,-	
C637	2203-001656	C-CER,CHIP;0.47nF,5%,50V,NP0,TP,1608	
C638	2401-002196	C-AL;4.7UF,20,25V,GP,TP,4X5.5MM,-	
C639	2203-000236	C-CER,CHIP;0.1NF,5%,,50V,C0G,TP,1608	
C640	2203-005146	C-CER,CHIP;100nF,10%,,16V,X7R,TP,1608	
C641	2401-003221	C-AL;100uF,20%,,16V,GP,TP,8X5,2.5	
C642	2401-002095	C-AL;47uF,20%,,25V,GP,TP,6.3x5.5	
C645	2203-000357	C-CER,CHIP;0.15NF,5%,,50V,C0G,TP,1608	
C646	2203-005148	C-CER,CHIP,100nF,10%,,16V,X7R,TP,1608	
C655A	2203-001140	C-CER,CHIP;68nF,10%,16V,X7R,TP,1608	
C661	2202-002055	C-CERAMIC,MLC-AXIAL;47nF,+80-20%,,50V,Y5V	
C688	2401-003107	C-AL;47uF,20%,,16V,GP,TP,5x7.5	
C691	2203-000257	C-CER,CHIP;10nF,10%,,50V,X7R,TP,1608	
C695	2203-000357	C-CER,CHIP;0.15NF,5%,,50V,C0G,TP,1608	
C696	2203-000236	C-CER,CHIP;0.1NF,5%,,50V,C0G,TP,1608	
CN604	AC37-00027A	CONNECTOR-HEADER,2004SWS,X-11,TB,5,W:7.4	
D603	0401-000101	DIODE-SWITCHING;1N4148,75V,150MA,DO-35,T	
D620	0402-000127	DIODE-RECTIFIER;1N4002,100V,1A,DO-41,TP	
D688	0401-000101	DIODE-SWITCHING;1N4148,75V,150MA,DO-35,T	
D692	0402-000127	DIODE-RECTIFIER;1N4002,100V,1A,DO-41,TP	
IC601	AC09-00506A	IC MICOM;N128-B64-3BA,SV-DVD440-02,100F	
IC604	AC14-12008C	IC;KA7533,DIP,-	
IC605	1103-001150	IC-EEPROM,24C081,1Kx8,DIP,8P,9.2x6.4mm,2	
IC608	1203-000515	IC-VOL. DETECTOR;7042,TO-92,3	BACK-UP 1HOUR Only
L603	2701-000002	INDUCTOR-AXIAL;100UH,10%,4298	
L605	2701-000002	INDUCTOR-AXIAL;100UH,10%,4298	
LD601	0601-001817	LED-IR,SIDE-VIEW,2.5mm,75mW,6V,940,TR	
PT601	0604-001275	PHOTO-INTERRUPTER,-,-,-,SNAP,TR	
PT602	0604-001275	PHOTO-INTERRUPTER,-,-,-,SNAP,TR	
Q601	0504-000129	TR-DIGITAL,KSR1104,NPN,,200mW,47K/47K,SOT	
R608	2001-000664	R-CARBON;56KOHM,5%,,1/8W,AA,TP,1.8X3.2MM	
R609	2001-000664	R-CARBON;56KOHM,5%,,1/8W,AA,TP,1.8X3.2MM	
R610	2001-000281	R-CARBON,1000HM,5%,,1/8W,AA,TP,1.8X3.2MM	
R611	2001-000281	R-CARBON,1000HM,5%,,1/8W,AA,TP,1.8X3.2MM	
R613	2007-000076	R-CHIP;1Kohm,5%,,1/10W,TP,1608	BACK-UP 1HOUR Only
R614	2001-000429	R-CARBON,1KOHM,5%,,1/8W,AA,TP,1.8X3.2MM	
R615	2001-000429	R-CARBON,1KOHM,5%,,1/8W,AA,TP,1.8X3.2MM	
R617	2001-000654	R-CARBON,30KOHM,5%,,1/8W,AA,TP,1.8X3.2MM	
R626	2007-000090	R-CHIP,10Kohm,5%,,1/10W,TP,1608	
R627	2007-000090	R-CHIP,10Kohm,5%,,1/10W,TP,1608	
R630	2007-000090	R-CHIP,10Kohm,5%,,1/10W,TP,1608	
R631	2007-000079	R-CHIP,1Kohm,5%,,1/10W,TP,1608	
R632	2001-000429	R-CARBON,1KOHM,5%,,1/8W,AA,TP,1.8X3.2MM	
R633	2001-000429	R-CARBON,1KOHM,5%,,1/8W,AA,TP,1.8X3.2MM	
R634	2007-000084	R-CHIP,4.7Kohm,5%,,1/10W,TP,1608	
R635	2007-000084	R-CHIP,4.7Kohm,5%,,1/10W,TP,1608	
R636	2001-000281	R-CARBON,1000HM,5%,,1/8W,AA,TP,1.8X3.2MM	
R640	2007-000090	R-CHIP;10Kohm,5%,,1/10W,TP,1608	
R641	2001-000780	R-CARBON,470OHM,5%,,1/8W,AA,TP,1.8X3.2MM	
R642	2001-000780	R-CARBON,470OHM,5%,,1/8W,AA,TP,1.8X3.2MM	
R644	2007-000078	R-CHIP;1Kohm,5%,,1/10W,TP,1608	
R647	2001-000429	R-CARBON,1KOHM,5%,,1/8W,AA,TP,1.8X3.2MM	
R651	2001-000010	R-CARBON;68KOHM,5%,,1/8W,AA,TP,1.8X3.2MM	
R652	2001-000568	R-CARBON,270HM,5%,,1/8W,AA,TP,	BACK-UP 1HOUR Only
R657	2007-000070	R-CHIP;0ohm,5%,,1/10W,TP,1608	
	2007-000100	R-CHIP,68Kohm,5%,,1/10W,TP,160	BACK-UP 1HOUR Only
R660	2001-000786	R-CARBON,47KOHM,5%,,1/8W,AA,TP,1.8X3.2MM	
R661	2001-000660	R-CARBON;33KOHM,5%,,1/8W,AA,TP,1.8X3.2MM	
R666	2007-000084	R-CHIP;4.7Kohm,5%,,1/10W,TP,1608	
R667	2007-000084	R-CHIP;4.7Kohm,5%,,1/10W,TP,1608	
R668	2001-000780	R-CARBON;470OHM,5%,,1/8W,AA,TP,1.8X3.2MM	
R669	2001-000780	R-CARBON;470OHM,5%,,1/8W,AA,TP,1.8X3.2MM	
R670	2001-000734	R-CARBON;4.7KOHM,5%,,1/8W,AA,TP,1.8X3.2M	
R671	2001-000734	R-CARBON;4.7KOHM,5%,,1/8W,AA,TP,1.8X3.2M	
R672	2001-000734	R-CARBON;4.7KOHM,5%,,1/8W,AA,TP,1.8X3.2M	
R673	2001-000429	R-CARBON;1KOHM,5%,,1/8W,AA,TP,1.8X3.2MM	
R674	2007-000090	R-CHIP;10Kohm,5%,,1/10W,TP,1608	
R675	2001-000032	R-CARBON;180OHM,5%,,1/4W,AA,TP,2.4X5.4MM	
R676	2001-000633	R-CARBON;30KOHM,5%,,1/8W,AA,TP,1.8X3.2MM	
R678	2007-000094	R-CHIP;22Kohm,5%,,1/10W,TP,1608	
R679	2007-000075	R-CHIP;22ohm,5%,,1/10W,TP,1608	
R682	2007-000094	R-CHIP;22Kohm,5%,,1/10W,TP,1608	
R685	2001-000812	R-CARBON;5.6KOHM,5%,,1/8W,AA,TP,1.8X3.2M	
R686	2007-000055	R-CHIP;27Kohm,5%,,1/10W,TP,1608	
R691	2007-000075	R-CHIP;22ohm,5%,,1/10W,TP,1608	
R692	2007-000097	R-CHIP;47Kohm,5%,,1/10W,TP,1608	
R694	2007-000097	R-CHIP;47Kohm,5%,,1/10W,TP,1608	
R698	2001-000290	R-CARBON;10KOHM,5%,,1/8W,AA,TP,1.8X3.2MM	
S602	0603-001134	PHOTO TR;-,30V,4V,50mA,75mW,TRAY	
SW601	AC34-00005A	SWITCH-MODE;-,-,-,-,-,-,-,-,-,-,-,-,-,-,-,-	
SW602	AC34-00006A	SWITCH-REC;-,-,-,-,-,-,-,-,-,-,-,-,-,-,-,-	
W668	2007-000070	R-CHIP;0ohm,5%,,1/10W,TP,1608	Not used SECAM
XT601	2801-003318	CRYSTAL-UNIT;32.768KHz,20ppm,	BACK-UP 1HOUR Only
XT602	2801-003139	CRYSTAL-UNIT;8MHz,50ppm,28-AAA,22pF,80oh	
AUDIO/VIDEO PARTS			
C315	2203-000975	C-CER,CHIP;47nF,10%,,25V,X7R,TP,1608,-	
C317	2401-000588	C-AL;1uF,20%,,50V,GP,TP,3x5.2.5	
C318	2401-000588	C-AL;1uF,20%,,50V,GP,TP,3x5.2.5	
C319	2203-000843	C-CER,CHIP;39nF,10%,,25V,X7R,TP,1608,-	
C320	2203-000975	C-CER,CHIP;47nF,10%,,25V,X7R,TP,1608,-	
C321	2203-002398	C-CER,CHIP,22nF,10%,,50V,X7R,TP,1608	
C322	2401-000588	C-AL;1uF,20%,,50V,GP,TP,3x5.2.5	
C324	2203-000257	C-CER,CHIP;10nF,10%,,50V,X7R,TP,1608	
C325	2401-001502	C-AL;47uF,20%,,16V,GP,TP,E.3x5.2.5	
C326	2401-000586	C-AL;1uF,20%,,50V,GP,TP,3x5.2.5	
C327	2203-001211	C-CER,CHIP;8.2nF,10%,,50V,X7R,TP,1608,-	
C328	2203-000257	C-CER,CHIP,10nF,10%,,50V,X7R,TP,1608	
C329	2203-005148	C-CER,CHIP,100nF,10%,,16V,X7R,TP,1608	
C330	2203-000975	C-CER,CHIP,47nF,10%,,25V,X7R,TP,1608,-	
C331	2203-005148	C-CER,CHIP,100nF,10%,,16V,X7R,TP,1608	
	2007-000070	R-CHIP;0ohm,5%,,1/10W,TP,1608	MESECAM Only
C332	2203-000975	C-CER,CHIP;47nF,10%,,25V,X7R,TP,1608,-	
C333	2401-000588	C-AL;1uF,20%,,50V,GP,TP,3.5x5.2.5	
C334	2203-000975	C-CER,CHIP;47nF,10%,,25V,X7R,TP,1608,-	
C334A	2203-000236	C-CER,CHIP;0.1NF,5%,,50V,C0G,TP,1608	
C335	2203-001652	C-CER,CHIP;470nF,+80-20%,,16V,Y5V,TP,1608	
C337	2203-001652	C-CER,CHIP;470nF,+80-20%,,16V,Y5V,TP,1608	
C338	2203-000609	C-CER,CHIP;22nF,10%,,50V,X7R,TP,2012	
C339	2401-000408	C-AL;10uF,20%,,16V,GP,TP,3.5x5,2.5	
C340	2401-001226	C-AL;4.7uF,20%,,16V,BP,TP,4x7.5mm	
C341	2401-003107	C-AL;47uF,20%,,16V,GP,TP,5x7.5	
C342	2202-002037	C-CERAMIC,MLC-AXIAL;100nF,80-20%,,50V,Y5V	
C343	2203-005065	C-CER,CHIP;1000nF,+80-20%,,10V,Y5V,-,1608	
C344	2203-000315	C-CER,CHIP;0.12NF,5%,,50V,C0G,TP,1608	
C345	2203-001607	C-CER,CHIP;0.22nF,5%,,50V,NP0,-,1608	
C347	2203-005065	C-CER,CHIP;1000nF,+80-20%,,10V,Y5V,-,1608	
C348	2203-005148	C-CER,CHIP;100nF,10%,,16V,X7R,TP,1608	
C349	2203-005065	C-CER,CHIP;1000nF,+80-20%,,10V,Y5V,-,1608	
C350	2203-005148	C-CER,CHIP,100nF,10%,,16V,X7R,TP,1608	
C351	2401-003107	C-AL;47uF,20%,,16V,GP,TP,5x7.5	
C352	2401-000568	C-AL;1uF,20%,,50V,GP,TP,3x5.2.5	
C353	2401-000588	C-AL;1uF,20%,,50V,GP,TP,3x5.2.5	
C354	2401-001502	C-AL;47uF,20%,,16V,GP,TP,E.3x5.2.5	
C355	2203-000975	C-CER,CHIP;47nF,10%,,25V,X7R,TP,1608,-	
C355A	2203-000236	C-CER,CHIP;0.1NF,5%,,50V,C0G,TP,1608	
C380	2203-002398	C-CER,CHIP;22nF,10%,,50V,X7R,TP,1608	
C392	2203-000257	C-CER,CHIP;10nF,10%,,50V,X7R,TP,1608	
C3A01	2401-002299	C-AL;4.7uF,20%,,50V,GP,TP,5x7.5	
C3A02	2401-000922	C-AL;,22uF,20%,,16V,GP,TP,5x5.5	
C3A06	2203-000257	C-CER,CHIP;10nF,10%,,50V,X7R,TP,1608	
C3A09	2203-001103	C-CER,CHIP;6.8nF,10%,,50V,X7R,TP,1608,-	
C3A10	2203-001211	C-CER,CHIP;8.2nF,10%,,50V,X7R,TP,1608,-	
C3A11	2301-001689	C-FILM,PEF;15nF,5%,,50V,TP,6.3x3x7mm,-	
C3A12	2401-002995	C-AL;47uF,20%,,25V,GP,TP,5.3x5.5	
C3A14	2202-000263	C-CERAMIC,MLC-AXIAL;470pF,10%,,50V,Y5P,TP	
C3A15	2203-000257	C-CER,CHIP;10nF,10%,,50V,X7R,TP,1608	
C3A16	2401-002799	C-AL;4.7uF,20%,,50V,GP,TP,5x7.5	
C3A17	2401-000414	C-AL;10uF,20%,,16V,GP,TP,4x7.5	
C3A18	2203-001126	C-CER,CHIP;0.68nF,10%,,50V,X7R,TP,1608	
C3A21A	2203-001554	C-CER,CHIP;1.8nF,10%,,50V,X7R,TP,1608	
C3A22	2203-005148	C-CER,CHIP,100nF,10%,,16V,X7R,TP,1608	
C3A23	2401-002065	C-AL;,33uF,20%,,16V,GP,TP,6.3x5,5	
C3A24	2203-005148	C-CER,CHIP;100nF,10%,,16V,X7R,TP,1608	
C3A29	2203-005148	C-CER,CHIP;100nF,10%,,16V,X7R,TP,1608	
C3A30	2401-001502	C-AL;47uF,20%,,16V,GP,TP,E.3x5,2.5	
C3A40	2401-000414	C-AL;10uF,20%,,16V,GP,TP,4x7.5	
C3A41	2401-000588	C-AL;1uF,20%,,50V,GP,TP,3x5,2.5	
C3A70	2203-001126	C-CER,CHIP;0.68nF,10%,,50V,X7R,TP,1608	
C3A71	2203-005148	C-CER,CHIP,100nF,10%,,16V,X7R,TP,1608	
CN301	3709-000394	CONNECTOR-FPC/FFC/PIC;SF1.25MM,STRAIGHT	
CN3A01	3709-001165	CONNECTOR-FPC/FFC/PIC;SF1.25MM,STRAIGHT	
CN3A02	AC37-00028A	CONNECTOR-SOCKET;-,JX-11,T9.0,WR.5,PBT,NT	
CN3A1S	3809-001206	CABLE-FLAT;30V,-20to+80C,140mm,6P,1.25mm	
D301	0401-000101	DIODE-SWITCHING;1N4148,75V,150MA,DO-35,T	
D302	0402-000127	DIODE-RECTIFIER;1N4002,100V,1A,DO-41,TP	
IC301	1204-002140	IC-VIDEO PROCESS;LA71750EM-MPB-E,DIP,100	
L301	2701-000002	INDUCTOR-AXIAL;100UH,10%,4298	
L301A	2701-000002	INDUCTOR-AXIAL;100UH,10%,4298	
L302	2701-000002	INDUCTOR-AXIAL;100UH,10%,4298	
L303	2701-000002	INDUCTOR-AXIAL;100UH,10%,4298	
L304	3301-000297	BEAD-AXIAL;25ohm,3.6x1.2x5.7mm,,TP,,,	
L370	2701-000113	INDUCTOR-AXIAL;180UH,5%,2534	
L3A01	2702-000126	INDUCTOR-RADIAL;15000uH,5%,6.2x7.4mm	
L3A02	2701-000002	INDUCTOR-AXIAL;100UH,10%,4298	
L3A03	2701-000002	INDUCTOR-AXIAL;100UH,10%,4298	
L3A70	2702-000120	INDUCTOR-RADIAL;15000uH,5%,6.2x7.4mm	
Q302	0501-000341	TR-SMALL SIGNAL;KSC1623-L,NPN,200mW,SOT-	SECAM Only
Q351	0501-000002	TR-SMALL SIGNAL;KSA912,PNP,150MW,SOT-23,	
Q3A01	0501-000396	TR-SMALL SIGNAL;KSC945,NPN,250mW,TO-92,T	
Q3A02	0501-000303	TR-SMALL SIGNAL;KSA733,PNP,250mW,TO-92,T	
Q3A03	0501-000442	TR-SMALL SIGNAL;KTC3265-Y,NPN,400mW,TO-9	
Q3A04	0501-000442	TR-SMALL SIGNAL;KTC3265-Y,NPN,400mW,TO-9	
Q3A05	0501-000442	TR-SMALL SIGNAL;KTC3265-Y,NPN,400mW,TO-9	
Q3A06	0501-000303	TR-SMALL SIGNAL;KSA733,PNP,250mW,TO-92,T	
R315	2007-000122	R-CHIP;1.2Kohm,5%,,1/10W,TP,1608	
R316	2007-001179	R-CHIP;8.2Kohm,5%,,1/10W,TP,1608	
R320	2007-000458	R-CHIP;18Kohm,5%,,1/10W,TP,1608	
R321	2007-000090	R-CHIP;10Kohm,5%,,1/10W,TP,1608	
R322	2007-000458	R-CHIP;18Kohm,5%,,1/10W,TP,1608	
R323	2007-000125	R-CHIP;3.9Kohm,5%,,1/10W,TP,1608	
R324	2007-000079	R-CHIP;1.8Kohm,5%,,1/10W,TP,1608	SECAM Only
R325	2001-000281	R-CARBON;1000HM,5%,,1/8W,AA,TP,1.8X3.2MM	
R326	2001-000281	R-CARBON;1000HM,5%,,1/8W,AA,TP,1.8X3.2MM	
R327	2007-000084	R-CHIP;4.7Kohm,5%,,1/10W,TP,1608	
R328	2007-000122	R-CHIP;1.2Kohm,5%,,1/10W,TP,1608	
R329	2007-000081	R-CHIP;2.7Kohm,5%,,1/10W,TP,1608	
R330	2007-000087	R-CHIP;6.8Kohm,5%,,1/10W,TP,1608	
R331	2007-000079	R-CHIP;1.8Kohm,5%,,1/10W,TP,1608	
R333	2007-001039	R-CHIP;56Kohm,5%,,1/8W,TP,2012	
R334	2007-000123	R-CHIP;1.5Kohm,5%,,1/10W,TP,1608	
R335	2001-000281	R-CARBON;1000HM,5%,,1/8W,AA,TP,1.8X3.2MM	
R350	2007-000123	R-CHIP;1.5Kohm,5%,,1/10W,TP,1608	SECAM Only
R360	2007-001196	R-CHIP;820Kohm,5%,,1/10W,TP,1608	
R372	2007-000076	R-CHIP;1Kohm,5%,,1/10W,TP,1608	
R373	2007-000093	R-CHIP;20Kohm,5%,,1/10W,TP,1608	
R380	2007-000124	R-CHIP;2.2Kohm,5%,,1/10W,TP,1608	
R3A01	2007-000090	R-CHIP;10Kohm,5%,,1/10W,TP,1608	
R3A04	2001-000221	R-CARBON;1.2KOHM,5%,,1/8W,AA,TP,1.8X3.2M	
R3A05	2007-000616	R-CHIP;24Kohm,5%,,1/10W,TP,1608	
R3A06	2007-000539	R-CHIP;200ohm,5%,,1/10W,TP,1608	
R3A07	2007-000133	R-CHIP;330Kohm,5%,,1/10W,TP,1608	
R3A08	2007-000091	R-CHIP;12Kohm,5%,,1/10W,TP,1608	
R3A09	2007-000070	R-CHIP;0ohm,5%,,1/10W,TP,1608	
R3A11	2007-000124	R-CHIP;2.2Kohm,5%,,1/10W,TP,1608	
R3A12	2007-000074	R-CHIP;100ohm,5%,,1/10W,TP,1608	
R3A13	2007-000097	R-CHIP;47Kohm,5%,,1/10W,TP,1608	
R3A14	2007-000094	R-CHIP;22Kohm,5%,,1/10W,TP,1608	
R3A16	2007-000090	R-CHIP;10Kohm,5%,,1/10W,TP,1608	
R3A17	2007-000124	R-CHIP;2.2Kohm,5%,,1/10W,TP,1608	
R3A18	2007-000124	R-CHIP;2.2Kohm,5%,,1/10W,TP,1608	
R3A23	2007-000091	R-CHIP;12Kohm,5%,,1/10W,TP,1608	
R3A24	2007-000094	R-CHIP;22Kohm,5%,,1/10W,TP,1608	
R3A25	2001-000221	R-CARBON;1.2KOHM,5%,,1/8W,AA,TP,1.8X3.2M	
R3A26	2007-000090	R-CHIP;10Kohm,5%,,1/10W,TP,1608	
R3A27	2007-001056	R-CHIP;5.2Kohm,5%,,1/10W,TP,1608	
R3A28	2007-000124	R-CHIP;2.2Kohm,5%,,1/10W,TP,1608	
R3A32	2007-000913	R-CHIP;43Kohm,5%,,1/10W,TP,1608	
R3A5C	2001-000800	R-CARBON;5.1KOHM,5%,,1/8W,AA,TP,1.8X3.2M	
R3A51	2007-000090	R-CHIP;10Kohm,5%,,1/10W,TP,1608	
R3A60	2007-000704	R-CHIP;3.6Kohm,5%,,1/10W,TP,1608	
R3A70	2007-000084	R-CHIP;4.7Kohm,5%,,1/10W,TP,1608	
W177	2001-000429	R-CARBON;1KOHM,5%,,1/8W,AA,TP,1.8X3.2MM	
W178	2001-000429	R-CARBON;1KOHM,5%,,1/8W,AA,TP,1.8X3.2MM	
W205	2001-000281	R-CARBON,1000HM,5%,,1/8W,AA,TP,1.8X3.2MM	
W206	2001-000281	R-CARBON,1000HM,5%,,1/8W,AA,TP,1.8X3.2MM	
W311	2701-000002	INDUCTOR-AXIAL;100UH,10%,4298	
XT301	2801-001397	CRYSTAL-UNIT;4.433619MHz,20ppm,28-AAA,S,	
TM-BLOCK PARTS			
C401	2401-003107	C-AL;47uF,20%,,16V,GP,TP,5x7.5	
C402	2203-002398	C-CER,CHIP;22nF,10%,,50V,X7R,TP,1608	
C403	2401-001502	C-AL;47uF,20%,,16V,GP,TP,E.3x5,2.5	
C404	2401-001077	C-AL;330nF,20%,,50V,GP,TP,4x7mm,5mm	
C405	2401-002436	C-AL;47uF,20%,,50V,WT,TP,E.3x11,5	
C406	2203-000257	C-CER,CHIP;10nF,10%,,50V,X7R,TP,1608	
C407	2401-003107	C-AL;47uF,20%,,16V,GP,TP,5x7.5	Not used SECAM
C409	2401-002299	C-AL;4.7uF,20%,,50V,GP,TP,5x7,	Not used SECAM
C410	2203-000257	C-CER,CHIP;10nF,10%,,50V,X7R,TP,1608	
D401	0402-000127	DIODE-RECTIFIER;1N4002,100V,1A,DO-41,TP	

L401	AC27-12001N	COIL CHOKE;10UH-15%,RA,K-30,080,150KHZ,-	
Q401	0501-000002	TR-SMALL SIGNAL;KSA812,PNP,15	Not used SECAM
R401	2001-000786	R-CARBON;47K OHM,5%,1/8W,AA,TP	Not used SECAM
R402	2001-000281	R-CARBON;100OHM,5%,1/8W,AA,TP	Not used SECAM
R403	2001-000281	R-CARBON;100OHM,5%,1/8W,AA,TP,1.8X3.2MM	
R404	2001-000281	R-CARBON;100OHM,5%,1/8W,AA,TP,1.8X3.2MM	
R406	2007-001010	R-CHIP;51Kohm,5%,1/10W,TP,1608	Not used SECAM
R408	2007-000122	R-CHIP;1.2Kohm,5%,1/16W,TP,16	Not used SECAM
R440	2001-000362	R-CARBON;150OHM,5%,1/8W,AA,TP	Not used SECAM
R441	2007-000116	R-CHIP;120ohm,5%,1/10W,TP,1608	Not used SECAM
TM401	AC40-00031A	TM BLOCK,TCPL0601PD20A,PAL B/G + SECAM,	SECAM Only
	AC40-00032A	TM BLOCK,TCM0610PD20A,PAL I,	U.K Only
	AC40-00029A	TM BLOCK,TCMK0601PD20A,PAL B/	Other Only
W404	2001-000780	R-CARBON;470OHM,5%,1/8W,AA,TP,1.8X3.2MM	
ZD401	0403-000390	DIODE-ZENER;UZP33B,31.4-34.6V,1000MW,DO-	
SECAM PARTS			
C3S01	2203-000257	C-CER,CHIP;10nF,10%,50V,X7R,TP,1608	SECAM Only
C3S02	2401-000598	C-AL,1uF,20%,50V,GP,TP,4x7,5	SECAM Only
C3S03	2203-000257	C-CER,CHIP;10nF,10%,50V,X7R,TP,1608	SECAM Only
C3S04	2401-000598	C-AL,1uF,20%,50V,GP,TP,4x7,5	SECAM Only
C3S05	2203-005148	C-CER,CHIP;100nF,10%,16V,X7R,TP,1608	SECAM Only
C3S06	2401-001324	C-AL,0.47UF,20%,50V,GP,BK,3X5,2.5	SECAM Only
C3S07	2007-000070	R-CHIP;0ohm,5%,1/10W,TP,1608	SECAM Only
C3S08	2203-005148	C-CER,CHIP;100nF,10%,16V,X7R,TP,1608	SECAM Only
C3S09	2401-001324	C-AL,0.47UF,20%,50V,GP,BK,3X5,2.5	SECAM Only
C3S10	2401-003107	C-AL,47uF,20%,16V,GP,TP,5x7,5	SECAM Only
C3S11	2203-005148	C-CER,CHIP;100nF,10%,16V,X7R,TP,1608	SECAM Only
C3S12A	2203-000491	C-CER,CHIP;2.2nF,10%,50V,X7R,TP,1608,-	SECAM Only
C3S14	2401-000665	C-AL,2.2uF,20%,50V,GP,TP,3.5x5,5	SECAM Only
C3S14A	2203-000491	C-CER,CHIP;2.2nF,10%,50V,X7R,TP,1608,-	SECAM Only
C3S15	2203-000440	C-CER,CHIP;1nF,10%,50V,X7R,TP,1608,-	SECAM Only
IC3S01	1204-001921	IC-CHROMA;LA70100M,SDP,30P,375MIL,PLASTI	SECAM Only
R3S01	2007-000078	R-CHIP;1Kohm,5%,1/10W,TP,1608	SECAM Only
R3S02	2001-000435	R-CARBON;1MOHM,5%,1/8W,AA,TP,1.8X3.2MM	SECAM Only
OSD/VPS/PDC PARTS			
C6P01	2203-000257	C-CER,CHIP;10nF,10%,50V,X7R,TP,1608	
C6P04	2203-000681	C-CER,CHIP;0.027NF,5%,50V,C0G,TP,1608	
C6P05	2203-000681	C-CER,CHIP;0.027NF,5%,50V,C0G,TP,1608	
C6P06	2203-000440	C-CER,CHIP;1nF,10%,50V,X7R,TP,1608,-	
C6P07	2401-002299	C-AL,4.7uF,20%,50V,GP,TP,5x7,5	
C6P08	2203-001071	C-CER,CHIP;0.056NF,5%,50V,C0G,TP,1608	
C6P10	2401-000598	C-AL,1uF,20%,50V,GP,TP,4x7,5	
C6P11	2401-000598	C-AL,1uF,20%,50V,GP,TP,4x7,5	
C6P12	2401-002165	C-AL,100uF,20%,16V,GP,TP,6.3x7.5	
C6P13	2203-005148	C-CER,CHIP;100nF,10%,16V,X7R,TP,1608	
C6P15	2203-001140	C-CER,CHIP;68nF,10%,16V,X7R,TP,1608	
D6P01	0401-000101	DIODE-SWITCHING;1N4148,75V,150MA,DO-35,T	
IC6P01	1204-001794	IC-AUDIO PROCESSOR;LC74775NM-3808,MFP,30	
L6P01	2701-000002	INDUCTOR-AXIAL,100UH,10%,4298	
L6P03	2701-000160	INDUCTOR-AXIAL,22uH,5%,2434	
L6P05	2701-000165	INDUCTOR-AXIAL,27uH,5%,2434	
Q6P01	0501-000303	TR-SMALL SIGNAL;KSA733,PNP,250mW,TO-92,T	
Q6P02	0501-000303	TR-SMALL SIGNAL;KSA733,PNP,250mW,TO-92,T	
Q6P04	0501-000398	TR-SMALL SIGNAL;KSC945,NPN,250mW,TO-92,T	
R6P01	2001-000281	R-CARBON;100OHM,5%,1/8W,AA,TP,1.8X3.2MM	
R6P02	2001-000281	R-CARBON;100OHM,5%,1/8W,AA,TP,1.8X3.2MM	
R6P03	2007-000081	R-CHIP;2.7Kohm,5%,1/10W,TP,1608	
R6P04	2007-000090	R-CHIP;10Kohm,5%,1/10W,TP,1608	
R6P05	2007-000090	R-CHIP;10Kohm,5%,1/10W,TP,1608	
R6P06	2007-000086	R-CHIP;5.6Kohm,5%,1/10W,TP,1608	
R6P07	2007-000075	R-CHIP;220ohm,5%,1/10W,TP,1608	
R6P08	2001-000005	R-CARBON;390ohm,5%,1/8W,AA,TP,1.8x3.2mm	
R6P09	2007-000070	R-CHIP;0ohm,5%,1/10W,TP,1608	
R6P10	2001-000515	R-CARBON;220OHM,5%,1/8W,AA,TP,1.8X3.2MM	
R6P12	2001-000734	R-CARBON;4.7KOHM,5%,1/8W,AA,TP,1.8X3.2M	
R6P13	2007-000097	R-CHIP;47Kohm,5%,1/10W,TP,1608	
R6P14	2007-000123	R-CHIP;1.5Kohm,5%,1/10W,TP,1608	
INPUT-OUTPUT PARTS			
C312	2401-000922	C-AL,22uF,20%,16V,GP,TP,5x5,5	
C313	2401-000922	C-AL,22uF,20%,16V,GP,TP,5x5,5	
C314	2401-000922	C-AL,22uF,20%,16V,GP,TP,5x5,5	
C315	2401-000922	C-AL,22uF,20%,16V,GP,TP,5x5,5	
C316	2401-002165	C-AL,100uF,20%,16V,GP,TP,6.3x7,5	
C317	2203-000257	C-CER,CHIP;10nF,10%,50V,X7R,TP,1608	
C319	2203-000783	C-CER,CHIP;0.33NF,5%,50V,C0G,TP,1608	
C321	2203-000783	C-CER,CHIP;0.33NF,5%,50V,C0G,TP,1608	
C322A	2203-000235	C-CER,CHIP;0.1NF,5%,50V,C0G,TP,1608	
C335	2401-001479	C-AL,470UF,20%,10V,GP,TP,6.3*11MM,-	
C337	2203-000257	C-CER,CHIP;10nF,10%,50V,X7R,TP,1608	
C340	2203-005148	C-CER,CHIP;100nF,10%,16V,X7R,TP,1608	
C351	2401-000922	C-AL,22uF,20%,16V,GP,TP,5x5,5	
C353	2203-000491	C-CER,CHIP;2.2nF,10%,50V,X7R,TP,1608,-	
C354	2203-000491	C-CER,CHIP;2.2nF,10%,50V,X7R,TP,1608,-	
C358	2401-000922	C-AL,22uF,20%,16V,GP,TP,5x5,5	
C390	2401-000922	C-AL,22uF,20%,16V,GP,TP,5x5,5	
D805	0401-000101	DIODE-SWITCHING;1N4148,75V,150MA,DO-35,T	
IC802	0801-002741	IC-CMOS LOGIC;BU4053BCPV,MUX,SSOP,16P,17	
J03C	2007-000070	R-CHIP;0ohm,5%,1/10W,TP,1608	
J11C	2007-000070	R-CHIP;0ohm,5%,1/10W,TP,1608	SECAM Only
J330	2007-000070	R-CHIP;0ohm,5%,1/10W,TP,1608	
J50A	2007-000070	R-CHIP;0ohm,5%,1/10W,TP,1608	
J901B	2007-000070	R-CHIP;0ohm,5%,1/10W,TP,1608	
J902B	2007-000070	R-CHIP;0ohm,5%,1/10W,TP,1608	
J903B	2007-000070	R-CHIP;0ohm,5%,1/10W,TP,1608	
J905	2007-000070	R-CHIP;0ohm,5%,1/10W,TP,1608	
J910	2007-000070	R-CHIP;0ohm,5%,1/10W,TP,1608	
J911	2007-000070	R-CHIP;0ohm,5%,1/10W,TP,1608	
J912	2007-000070	R-CHIP;0ohm,5%,1/10W,TP,1608	
J914	2007-000070	R-CHIP;0ohm,5%,1/10W,TP,1608	
JC801	3722-001574	JACK-SCART,21P,-,SN,BLK,#20-28	
JC802	AC37-22002P	JACK-PIN;3.2mm,DPAM-9837,2P11,MC NO.SV-	
L903	2701-000181	INDUCTOR-AXIAL,33uH,5%,2434	
L908	2701-000181	INDUCTOR-AXIAL,33uH,5%,2434	
L910	2701-000181	INDUCTOR-AXIAL,33uH,5%,2434	
L950	2701-000002	INDUCTOR-AXIAL,100UH,10%,4298	
Q802	0504-000119	TR-DIGITAL;KSR1004,NPN,300MW,47K,47K,TO-	
Q803	0504-000129	TR-DIGITAL;KSR1104,NPN,200mW,47K,47K,SOT	
Q804	0504-000142	TR-DIGITAL;KSR2001,PNP,300MW,4.7K,4.7K,T	
Q806	0504-000152	TR-DIGITAL;KSR2101,PNP,200mW,4.7K,4.7K,S	
Q808	0504-000119	TR-DIGITAL;KSR1004,NPN,300MW,47K,47K,TO-	
Q810	0501-000341	TR-SMALL SIGNAL;KSC1623-L,NPN,250mW,SOT-	
Q811	0501-000341	TR-SMALL SIGNAL;KSC1623-L,NPN,250mW,SOT-	
Q891A	0501-000398	TR-SMALL SIGNAL;KSC945,NPN,25	Not used SECAM
R801A	2007-000116	R-CHIP;120ohm,5%,1/10W,TP,1608	
R802	2007-000079	R-CHIP;1.8Kohm,5%,1/10W,TP,1608	
R803	2007-000079	R-CHIP;1.8Kohm,5%,1/10W,TP,1608	
R805	2007-000643	R-CHIP;270ohm,5%,1/10W,TP,1608	
R807	2007-001134	R-CHIP;68ohm,5%,1/10W,TP,1608	
R813	2007-000643	R-CHIP;270ohm,5%,1/10W,TP,1608	
R814	2007-000643	R-CHIP;270ohm,5%,1/10W,TP,1608	
R815	2007-000643	R-CHIP;270ohm,5%,1/10W,TP,1608	
R816	2007-000643	R-CHIP;270ohm,5%,1/10W,TP,1608	
R822B	2007-001167	R-CHIP;75ohm,5%,1/10W,TP,1608	
R825	2007-000084	R-CHIP;4.7Kohm,5%,1/10W,TP,1608	
R827	2007-000101	R-CHIP;82Kohm,5%,1/10W,TP,1608	
R828	2007-000101	R-CHIP;82Kohm,5%,1/10W,TP,1608	
R829	2007-000101	R-CHIP;82Kohm,5%,1/10W,TP,1608	
R830	2007-000101	R-CHIP;82Kohm,5%,1/10W,TP,1608	
R835	2007-000101	R-CHIP;82Kohm,5%,1/10W,TP,1608	

R836	2007-000101	R-CHIP;82Kohm,5%,1/10W,TP,1608	
R842	2007-000119	R-CHIP;560ohm,5%,1/10W,TP,1608	
R843	2007-000119	R-CHIP;560ohm,5%,1/10W,TP,1608	
R844	2007-001167	R-CHIP;75ohm,5%,1/10W,TP,1608	
R852	2007-000097	R-CHIP;47Kohm,5%,1/10W,TP,1608	
R891A	2007-000090	R-CHIP;10Kohm,5%,1/10W,TP,160	Not used SECAM
R892A	2007-001179	R-CHIP;8.2Kohm,5%,1/10W,TP,16	Not used SECAM
R893A	2007-000122	R-CHIP;1.2Kohm,5%,1/10W,TP,16	Not used SECAM
R894A	2007-000655	R-CHIP;27Kohm,5%,1/10W,TP,160	Not used SECAM
ZD801	0403-000297	DIODE-ZENER;MTZ6.2B,5.96-6.27V,500MW,DO-	
ZD805	0403-001211	DIODE-ZENER;MTZJ12B,11.8-12.3V,500MW,DO-	
ZD806	0403-001083	DIODE-ZENER;UDZS.18,8.85-9.23V,200MW,UMD	
ZD807	0403-001083	DIODE-ZENER;UDZS.18,8.85-9.23V,200MW,UMD	
ZD811	0403-000720	DIODE-ZENER;MTZJ9.1B,8.57-9.01V,500MW,DO	
ZD853	0403-000720	DIODE-ZENER;MTZJ9.1B,8.57-9.01V,500MW,DO	
ZD854	0403-000720	DIODE-ZENER;MTZJ9.1B,8.57-9.01V,500MW,DO	
ZD863	0403-001083	DIODE-ZENER;UDZS.18,8.85-9.23V,200MW,UMD	
DISPLAY/FUNCTION MATRIX PARTS			
BD701	3301-001419	BEAD-SMD;-,220,-,500,TP,-,0.3	
BD702	3301-001419	BEAD-SMD;-,220,-,500,TP,-,0.3	
BD703	3301-001419	BEAD-SMD;-,220,-,500,TP,-,0.3	
C701	2401-002165	C-AL,100uF,20%,16V,GP,TP,6.3x7,5	
C702	2203-000257	C-CER,CHIP;10nF,10%,50V,X7R,TP,1608	
C703	2203-000440	C-CER,CHIP;1nF,10%,50V,X7R,TP,1608,-	
C706	2203-000239	C-CER,CHIP;0.1NF,5%,50V,C0G,TP,2012	
C707	2401-001992	C-AL,2200UF,20%,10V,WT,TP,10X20MM,5	
C708A	2203-000257	C-CER,CHIP;10nF,10%,50V,X7R,TP,1608	
C712	2203-000491	C-CER,CHIP;2.2nF,10%,50V,X7R,TP,1608,-	
C714	2203-000491	C-CER,CHIP;2.2nF,10%,50V,X7R,TP,1608,-	
CN701	3710-001918	CONNECTOR-SOCKET;6P,1R,2MM,ANGLE,SN	
CN701A	3711-005312	CONNECTOR-HEADER,3WALL,6P,1R,2MM,STRAIGH	
D701	0401-000101	DIODE-SWITCHING;1N4148,75V,150MA,DO-35,T	
D702	0401-000101	DIODE-SWITCHING;1N4148,75V,150MA,DO-35,T	
D703	0401-000101	DIODE-SWITCHING;1N4148,75V,150MA,DO-35,T	
D704	0401-000101	DIODE-SWITCHING;1N4148,75V,150MA,DO-35,T	
D705	0401-000101	DIODE-SWITCHING;1N4148,75V,150MA,DO-35,T	
DT701	AC07-00069A	LED DISPLAY;9CD-9027E,SV-DVD440 5-DIGIT,	
IC701	1003-001561	IC-LED DRIVER;PT6961,SOP,30P,300MIL,-,-40	
JK701	3722-002170	JACK-PIN;2P,NI,WHT/YEL,ANGLE	
L701	2701-000002	INDUCTOR-AXIAL,100UH,10%,4298	
L702	2701-000002	INDUCTOR-AXIAL,100UH,10%,4298	
R701	2001-000429	R-CARBON;1KOHM,5%,1/8W,AA,TP,1.8X3.2MM	
R702	2007-000078	R-CHIP;1Kohm,5%,1/10W,TP,1608	
R703	2007-000078	R-CHIP;1Kohm,5%,1/10W,TP,1608	
R704	2001-000837	R-CARBON;51KOHM,5%,1/8W,AA,TP,1.8X3.2MM	
R711	2007-000090	R-CHIP;10Kohm,5%,1/10W,TP,1608	
R712	2007-001167	R-CHIP;75ohm,5%,1/10W,TP,1608	
RM701	AC32-00006A	MODULE REMOCON;TSOP2238WE1,38KHZ,-,5.08m	
SW701	3404-001182	SWITCH-TACT;DC12V,50MA,100GF,5.0X5.0X5.0	
SW702	3404-001182	SWITCH-TACT;DC12V,50MA,100GF,5.0X5.0X5.0	
SW703	3404-001182	SWITCH-TACT;DC12V,50MA,100GF,5.0X5.0X5.0	
SW704	3404-001182	SWITCH-TACT;DC12V,50MA,100GF,5.0X5.0X5.0	
SW705	3404-001182	SWITCH-TACT;DC12V,50MA,100GF,5.0X5.0X5.0	
SW707	3404-001182	SWITCH-TACT;DC12V,50MA,100GF,5.0X5.0X5.0	
SW708	3404-001182	SWITCH-TACT;DC12V,50MA,100GF,5.0X5.0X5.0	
SW709	3404-001182	SWITCH-TACT;DC12V,50MA,100GF,5.0X5.0X5.0	
SW710	3404-001182	SWITCH-TACT;DC12V,50MA,100GF,5.0X5.0X5.0	
SW713	3404-001182	SWITCH-TACT;DC12V,50MA,100GF,5.0X5.0X5.0	
SW714	3404-001182	SWITCH-TACT;DC12V,50MA,100GF,5.0X5.0X5.0	
SW715	3404-001182	SWITCH-TACT;DC12V,50MA,100GF,5.0X5.0X5.0	
SW716	3404-001182	SWITCH-TACT;DC12V,50MA,100GF,5.0X5.0X5.0	
W735	2202-002037	C-CERAMIC,MLC-AXIAL,100nF,80-	Not used SECAM
ZD701	0403-000720	DIODE-ZENER;MTZJ9.1B,8.57-9.01V,500MW,DO	

601		**ASSY PCB-MAIN;SV-DVD545**	**SV-DVD545 Only**
S.M.P.S. PARTS			
BD1S01	AC27-32001M	COIL-INDUCTOR;RH3.5X6.5RS,BEADRADIAL,-	
BD1S02	AC27-32001M	COIL-INDUCTOR;RH3.5X6.5RS,BEADRADIAL,-	
BD1SS3	AC27-32001M	COIL-INDUCTOR;RH3.5X6.5RS,BEADRADIAL,-	
C1SD12	2305-001029	C-FILM,LEAD-PEF,10nF,10%,630V,T12x9x12	
C1SD13	2301-000383	C-FILM,LEAD-PEF,10nF,5%,50V,T9.5x7x3.2mm	
C1SD16	2201-000129	C-CERAMIC,DISC,2.2NF,10%,-,Y5V,Y5P,TP,7X4M	
C1SF02	2401-002638	C-AL,33uF,20%,35V,GP,TP,5x11,5	
C1SS01	2301-001157	C-FILM,LEAD-PEF,47nF,10%,275V,SK,17.5x12	⚠
C1SS02	2301-001157	C-FILM,LEAD-PEF,47nF,10%,275V,SK,17.5x12	⚠
C1SS03	2201-002044	C-CERAMIC,DISC,0.1NF,10%,400V,Y5P,TP,9.5	⚠
C1SS05	2201-002044	C-CERAMIC,DISC,0.1NF,10%,400V,Y5P,TP,9.5	⚠
C1SS06	2201-002044	C-CERAMIC,DISC,0.1NF,10%,400V,Y5P,TP,9.5	⚠
C1SS10	2401-003303	C-AL,82uF,20%,400V,GP,BK,22X30,10	
C1SS11	2401-000696	C-AL,1uF,20%,50V,GP,TP,4x7,5	
C1SS12	2401-002299	C-AL,4.7uF,20%,50V,GP,TP,5x7,5	
C1SS15	2401-001992	C-AL,2200UF,20%,10V,WT,TP,10X20MM,5	
C1SS16	2401-003480	C-AL,1000UF,20%,10V,LZ,TP,10X16MM,5	
C1SS17	2401-001992	C-AL,2200UF,20%,10V,WT,TP,10X20MM,5	
C1SS18	2401-001992	C-AL,2200UF,20%,10V,WT,TP,10X20MM,5	
C1SS19	2401-000365	C-AL,10uF,20%,100V,GP,TP,6.3x11,5	
C1SS21	2401-001126	C-AL,330uF,20%,25V,WT,TP,10x12.5,5	
C1SS22	2401-001126	C-AL,330uF,20%,25V,WT,TP,10x12.5,5	
C1SS26	2401-001126	C-AL,330uF,20%,25V,WT,TP,10x12.5,5	
C1SS27	2301-000129	C-FILM,LEAD-PEF,100nF,5%,50V,TP,10X5X4.3	
CN01	3711-005565	CONNECTOR-HEADER;NOWALL,24P,1R,2mm,STRAI	
CN1SS1	3711-000178	CONNECTOR-HEADER,1WALL,2P,1R,3.96mm,STRA	
D1SF01	0401-000101	DIODE-SWITCHING;1N4148,75V,150MA,DO-35,T	
D1SF02	0402-001195	DIODE-RECTIFIER,FT4,400V,1A,DO-204AC,TP	
D1SS01	0402-001196	DIODE-RECTIFIER;1TS,600V,1A,TS-1,TP	
D1SS02	0402-001196	DIODE-RECTIFIER;1TS,600V,1A,TS-1,TP	
D1SS03	0402-001196	DIODE-RECTIFIER;1TS,600V,1A,TS-1,TP	
D1SS04	0402-001195	DIODE-RECTIFIER;1TS,600V,1A,TS-1,TP	
D1SS11	0402-000012	DIODE-RECTIFIER;UF4007,1KV,1A,DO-41,TP	
D1SS12	0404-001225	DIODE-SCHOTTKY;SRAF560,60V,5000mA,ITO-22	
D1SS13	0404-001225	DIODE-SCHOTTKY;SRAF560,60V,5000mA,ITO-22	
D1SS14	0404-001225	DIODE-SCHOTTKY;SRAF560,60V,5000mA,ITO-22	
D1SS15	0402-001195	DIODE-RECTIFIER,FT4,400V,1A,DO-204AC,TP	
D1SS16	0402-001194	DIODE-RECTIFIER,UG2D,200V,2A,-,TP	
D1SS19	0402-001195	DIODE-RECTIFIER,FT4,400V,1A,DO-204AC,TP	
F1SS01	3601-001123	FUSE-CARTRIDGE;250V,1.6A,TIME-LAG,CERAMI	⚠
FZ01	3601-001240	FUSE-RADIAL LEAD;50V,1A,-,-,5.0x4.0x5.0m	
FZ02	3601-001240	FUSE-RADIAL LEAD;50V,1A,-,-,5.0x4.0x5.0m	
IC1S02	2604-001028	PHOTO-COUPLER;TR,50-600%,250mW,DIP-4,ST	⚠
IC1S03	AC14-12006D	IC,KA431Z,TO-92,TAPING	
IC1SS2	1203-002805	IC-PWM CONTROLLER;HCE2BS01,PDIP,8P,9.52X	
L1SS01	AC29-00002A	FILTER LINE NOISE;-,30mH,-,-,BLF-2116	
L1SS02	AC29-00003A	FILTER LINE NOISE;-,20mH,MIN,-,-,-	⚠
L1SS03	AC27-12001N	COIL CHOKE;10UH-15%,RA,K-30,080,150KHZ,-	
L1SS04	AC27-12001N	COIL CHOKE;10UH-15%,RA,K-30,080,150KHZ,-	
L1SS05	AC27-12001N	COIL CHOKE;10UH-15%,RA,K-30,080,150KHZ,-	
PT1S01	AC26-00012J	TRANS SWITCHING;EER-3126,SLV-D950E,-,-,-	⚠
R1SD11	2006-000273	R-CEMENT;27KOHM,5%,2W,CA,BK,5.4X5.5X18M	
R1SD13	2006-000273	R-CEMENT;27KOHM,5%,2W,CA,BK,5.4X5.5X19M	
R1SD14	2001-000598	R-CARBON;3.3OHM,5%,1/8W,AA,TP,1.8X3.2MM	
R1SF05	2001-000527	R-CARBON;22OHM,5%,1/8W,AA,TP,1.8X3.2MM	
R1SF06	2004-000459	R-METAL,2.2KOHM,1%,1/8W,AA,TP,1.8x3.2m	
R1SF07	2003-000105	R-METAL OXIDE;0.33ohm,5%,2W,AD,TP,6x16mm	
R1SQ11	2001-000281	R-CARBON;100OHM,5%,1/8W,AA,TP,1.8X3.2MM	
R1SR01	2001-000548	R-CARBON;270KOHM,5%,1/8W,AA,TP,1.8X3.2M	
R1SR02	2001-000548	R-CARBON;270KOHM,5%,1/8W,AA,TP,1.8X3.2M	
R1SR03	2001-000548	R-CARBON;270KOHM,5%,1/8W,AA,TP,1.8X3.2M	
R1SS01	2006-000252	R-CEMENT;2.7ohm,10%,2W,CB,TP,7.5x11x20.	
R1SS08	2001-000793	R-CARBON;470HM,5%,1/8W,AA,TP,1.8X3.2MM	

Loc. No.	Part No.	Description	Remark
R1SS31	2001-000780	R-CARBON:470OHM,5%,1/8W,AA,TP,1.8X3.2MM	
R1SS32	2001-000429	R-CARBON;1KOHM,5%,1/8W,AA,TP,1.8X3.2MM	
R1SS33	2001-000429	R-CARBON;1KOHM,5%,1/8W,AA,TP,1.8X3.2MM	
R1SS34	2004-000869	R-METAL;3Kohm,1%,1/8W,AA,TP,1.8x3.2mm	
R1SS35	2004-000459	R-METAL;2.2Kohm,1%,1/8W,AA,TP,1.8x3.2m	
ZD1SS1	0403-000713	DIODE-ZENER;MTZJ20B,18.63-17.7V,500MW,DO	
ZD1SS2	0403-001318	DIODE-ZENER;MTZJ4.3B,4.17-4.43V,500MW,DO	

POWER DRIVER PARTS

Loc. No.	Part No.	Description	Remark
C1P101	2401-003480	C-AL;1000UF,20%,10V,LZ,TP,10X16MM,5	
C1P102	2401-003336	C-AL;4.7UF,20%,50V,GP,TP,5X5,2	
C1P103	2401-002026	C-AL;10UF,20%,35V,GP,TP,5X5,2.5	
C1P104	2401-000588	C-AL;1uF,20%,50V,GP,TP,3x5,2.5	
C1P105	2401-003336	C-AL;4.7UF,20%,50V,GP,TP,5X5,2	
C1P106	2401-000463	C-AL;10UF,20%,35V,GP,-,5X5,5	
C1P107	2401-002299	C-AL;4.7uF,20%,50V,GP,TP,5x7,5	
C1P109	2401-000414	C-AL;10uF,20%,16V,GP,TP,4x7,5	
C1P110	2401-000414	C-AL;10uF,20%,16V,GP,TP,4x7,5	
C1P111	2401-000463	C-AL;10UF,20%,35V,GP,-,5X5,5	
C1P112	2401-002299	C-AL;4.7uF,20%,50V,GP,TP,5x7,5	
C1P113	2401-000598	C-AL;1uF,20%,50V,GP,TP,4x7,5	
C1P114	2401-002165	C-AL;100uF,20%,16V,GP,TP,6.3x7,5	
C1P115	2401-002165	C-AL;100uF,20%,16V,GP,TP,6.3x7,5	
C1P116	2401-002299	C-AL;4.7uF,20%,50V,GP,TP,5x7,5	
D1P104	0401-000101	DIODE-SWITCHING;1N4148,75V,150MA,DO-35,T	
D1P105	0401-000101	DIODE-SWITCHING;1N4148,75V,150MA,DO-35,T	
D1P106	0401-000101	DIODE-SWITCHING;1N4148,75V,150MA,DO-35,T	
D1P107	0401-000101	DIODE-SWITCHING;1N4148,75V,150MA,DO-35,T	
D1P108	0401-000101	DIODE-SWITCHING;1N4148,75V,150MA,DO-35,T	
D1P130	0402-000127	DIODE-RECTIFIER;1N4002,100V,1A,DO-41,TP	
L1P102	AC27-12001N	COIL CHOKE;10UH-15%,RA,K-30,Q80,150KHZ,-	
Q1P101	0501-000362	TR-SMALL SIGNAL;KSC2328A-Y,NPN,1000MW,TO	
Q1P102	0504-000142	TR-DIGITAL;KSR2001,PNP,300MW,4.7K/4.7K,T	
Q1P103	0501-000398	TR-SMALL SIGNAL;KSC945,NPN,250mW,TO-92,T	
Q1P104	0501-000362	TR-SMALL SIGNAL;KSC2328A-Y,NPN,1000MW,TO	
Q1P105	0501-000362	TR-SMALL SIGNAL;KSC2328A-Y,NPN,1000MW,TO	
Q1P106	0501-000362	TR-SMALL SIGNAL;KSC2328A-Y,NPN,1000MW,TO	
Q1P107	0501-000362	TR-SMALL SIGNAL;KSC2328A-Y,NPN,1000MW,TO	
Q1P108	0504-000142	TR-DIGITAL;KSR2001,PNP,300MW,4.7K/4.7K,T	
Q1P109	0501-000398	TR-SMALL SIGNAL;KSC945,NPN,250mW,TO-92,T	
D1P110	0501-000362	TR-SMALL SIGNAL;KSC2328A-Y,NPN,1000MW,TO	
Q1P111	0501-000362	TR-SMALL SIGNAL;KSC2328A-Y,NPN,1000MW,TO	
R1P101	2001-000855	R-CARBON;560OHM,5%,1/4W,AA,TP,2.4X6.4MM	
R1P103	2007-000402	R-CHIP;150ohm,5%,1/10W,TP,1608	
R1P104	2001-000449	R-CARBON;2.2KOHM,5%,1/8W,AA,TP,1.8X3.2M	
R1P105	2001-000969	R-CARBON;75OHM,5%,1/8W,AA,TP,1.8X3.2MM	
R1P109	2001-000362	R-CARBON;150OHM,5%,1/8W,AA,TP,1.8X3.2MM	
R1P110	2001-000449	R-CARBON;2.2KOHM,5%,1/8W,AA,TP,1.8X3.2M	
R1P111	2001-000062	R-CARBON;470OHM,5%,1/4W,AA,TP,2.4X6.4MM	
R1P112	2001-000302	R-CARBON;10OHM,5%,1/8W,AA,TP,1.8X3.2MM	
R1P122	2007-000134	R-CHIP;33Kohm,5%,1/10W,TP,1608	
ZD1P02	0403-001211	DIODE-ZENER;MTZJ12B,11.8-12.3V,500MW,DO-	
ZD1P03	0403-000720	DIODE-ZENER;MTZJ9.1B,8.57-9.01V,500MW,DO	
ZD1P04	0403-000717	DIODE-ZENER;MTZJ5.1B,4.94-5.2V,500MW,DO-	
ZD1P05	0403-001211	DIODE-ZENER;MTZJ12B,11.8-12.3V,500MW,DO-	
ZD1P06	0403-000717	DIODE-ZENER;MTZJ5.1B,4.94-5.2V,500MW,DO-	

SYSTEM CONTROL/SERVO PARTS

Loc. No.	Part No.	Description	Remark
C601	2203-002398	C-CER,CHIP;22nF,10%,50V,X7R,TP,1608	
C602	2401-002095	C-AL;47uF,20%,25V,GP,TP,6.3x5,5	
C605	2203-000257	C-CER,CHIP;10nF,10%,50V,X7R,TP,1608	
C606	2401-000119	C-AL;1000uF,20%,10V,GP,TP,10x12.5,5	
C607A	2401-003107	C-AL;47uF,20%,16V,GP,TP,5x7,5	
C608	2401-002259	C-AL;0.1F,+80-20%,5.5V,-,TP,1	BACK-UP 1HOUR Only
C610	2202-002037	C-CERAMIC,MLC-AXIAL;100nF,80-20%,50V,Y5V	
C618	2401-000360	C-AL;100uF,20%,50V,GP,TP,8x11.5,5	
C618A	2401-002095	C-AL;47uF,20%,25V,GP,TP,6.3x5,5	
C619	2203-000257	C-CER,CHIP;10nF,10%,50V,X7R,TP,1608	
C620	2401-001543	C-AL;47uF,20%,25V,GP,TP,6.3x5mm,2.5	
C621	2203-000257	C-CER,CHIP;10nF,10%,50V,X7R,TP,1608	
C623	2203-000257	C-CER,CHIP;10nF,10%,50V,X7R,TP,1608	
C624	2203-000626	C-CER,CHIP;0.022nF,5%,50V,C0G	BACK-UP 1HOUR Only
C625	2203-000626	C-CER,CHIP;0.022nF,5%,50V,C0G	BACK-UP 1HOUR Only
C626	2203-000626	C-CER,CHIP;0.022nF,5%,50V,C0G,TP,1608	
C627	2203-000626	C-CER,CHIP;0.022nF,5%,50V,C0G,TP,1608	
C628	2203-000681	C-CER,CHIP;0.027NF,5%,50V,C0G,TP,1608	
C633	2203-000257	C-CER,CHIP;10nF,10%,50V,X7R,TP,1608	
C635	2203-000491	C-CER,CHIP;2.2nF,10%,50V,X7R,TP,1608,-	
C636	2203-000491	C-CER,CHIP;2.2nF,10%,50V,X7R,TP,1608,-	
C637	2203-001656	C-CER,CHIP;0.47nF,5%,50V,NP0,TP,1608	
C638	2401-002196	C-AL;4.7UF,20,25V,GP,TP,4X5,5MM,-	
C639	2203-000236	C-CER,CHIP;0.1NF,5%,50V,C0G,TP,1608	
C640	2203-005148	C-CER,CHIP;100nF,10%,16V,X7R,TP,1608	
C641	2401-003221	C-AL;100uF,20%,16V,GP,TP,8X5,2.5	
C642	2401-002095	C-AL;47uF,20%,25V,GP,TP,6.3x5,5	
C645	2203-000357	C-CER,CHIP;0.15NF,5%,50V,C0G,TP,1608	
C646	2203-005148	C-CER,CHIP;100nF,10%,16V,X7R,TP,1608	
C659A	2203-001140	C-CER,CHIP;68nF,10%,16V,X7R,TP,1608	
C661	2202-002055	C-CERAMIC,MLC-AXIAL;47nF,+80-20%,50V,Y5V	
C688	2401-003107	C-AL;47uF,20%,16V,GP,TP,5x7.5	
C691	2203-000257	C-CER,CHIP;10nF,10%,50V,X7R,TP,1608	
C695	2203-000357	C-CER,CHIP;0.15NF,5%,50V,C0G,TP,1608	
C696	2203-000236	C-CER,CHIP;0.1NF,5%,50V,C0G,TP,1608	
CN604	AC37-00027A	CONNECTOR-HEADER;20045WS,X-11,T8.5,W17.4	
D603	0401-000101	DIODE-SWITCHING;1N4148,75V,150MA,DO-35,T	
D620	0402-000127	DIODE-RECTIFIER;1N4002,100V,1A,DO-41,TP	
D688	0401-000101	DIODE-SWITCHING;1N4148,75V,150MA,DO-35,T	
D692	0402-000127	DIODE-RECTIFIER;1N4002,100V,1A,DO-41,TP	
IC601	AC09-00506A	IC MICOM;N128-B64-3BA,SV-DVD440-02,100P	
IC604	AC14-12006C	IC;KA7533,DIP,-	
IC605	1103-001150	IC-EEPROM;24C081,1Kx8,DIP,8P,9.2x6.4mm,2	
IC608	1203-000515	IC-VOL. DETECTOR;7042,TO-92,3	BACK-UP 1HOUR Only
L603	2701-000002	INDUCTOR-AXIAL;100UH,10%,4298	
L605	2701-000002	INDUCTOR-AXIAL;100UH,10%,4298	
LD601	0601-001817	LED-IR;SIDE-VIEW,2.5mm,75mW,6V,940,TR	
PT601	0604-001275	PHOTO-INTERRUPTER;-,-,-,SNAP,TR	
PT602	0604-001275	PHOTO-INTERRUPTER;-,-,-,SNAP,TR	
Q601	0504-000129	TR-DIGITAL;KSR1104,NPN,200mW,47K/47K,SOT	
R608	2001-000864	R-CARBON;56KOHM,5%,1/8W,AA,TP,1.8X3.2MM	
R609	2001-000864	R-CARBON;56KOHM,5%,1/8W,AA,TP,1.8X3.2MM	
R610	2001-000281	R-CARBON;100OHM,5%,1/8W,AA,TP,1.8X3.2MM	
R611	2001-000281	R-CARBON;100OHM,5%,1/8W,AA,TP,1.8X3.2MM	
R613	2007-000078	R-CHIP;1Kohm,5%,1/10W,TP,1608	BACK-UP 1HOUR Only
R614	2001-000429	R-CARBON;1KOHM,5%,1/8W,AA,TP,1.8X3.2MM	
R615	2001-000429	R-CARBON;1KOHM,5%,1/8W,AA,TP,1.8X3.2MM	
R617	2001-000864	R-CARBON;56KOHM,5%,1/8W,AA,TP,1.8X3.2MM	
R620	2007-000090	R-CHIP;10Kohm,5%,1/10W,TP,1608	
R622	2007-000090	R-CHIP;10Kohm,5%,1/10W,TP,1608	
R630	2007-000090	R-CHIP;10Kohm,5%,1/10W,TP,1608	
R631	2007-000078	R-CHIP;1Kohm,5%,1/10W,TP,1608	
R632	2001-000429	R-CARBON;1KOHM,5%,1/8W,AA,TP,1.8X3.2MM	
R633	2001-000429	R-CARBON;1KOHM,5%,1/8W,AA,TP,1.8X3.2MM	
R634	2007-000084	R-CHIP;4.7Kohm,5%,1/10W,TP,1608	
R635	2007-000084	R-CHIP;4.7Kohm,5%,1/10W,TP,1608	
R636	2001-000281	R-CARBON;100OHM,5%,1/8W,AA,TP,1.8X3.2MM	
R640	2007-000090	R-CHIP;10Kohm,5%,1/10W,TP,1608	
R641	2001-000780	R-CARBON;470OHM,5%,1/8W,AA,TP,1.8X3.2MM	
R642	2001-000780	R-CARBON;470OHM,5%,1/8W,AA,TP,1.8X3.2MM	
R644	2007-000078	R-CHIP;1Kohm,5%,1/10W,TP,1608	
R647	2001-000429	R-CARBON;1KOHM,5%,1/8W,AA,TP,1.8X3.2MM	
R651	2001-000010	R-CARBON;68KOHM,5%,1/8W,AA,TP,1.8X3.2MM	

Loc. No.	Part No.	Description	Remark
R652	2001-000568	R-CARBON;27OHM,5%,1/8W,AA,TP,	BACK-UP 1HOUR Only
R657	2007-000070	R-CHIP;0ohm,5%,1/10W,TP,1608	
	2007-000100	R-CHIP;68Kohm,5%,1/10W,TP,160	BACK-UP 1HOUR Only
R660	2001-000786	R-CARBON;47KOHM,5%,1/8W,AA,TP,1.8X3.2MM	
R661	2001-000660	R-CARBON;33KOHM,5%,1/8W,AA,TP,1.8X3.2MM	
R666	2007-000084	R-CHIP;4.7Kohm,5%,1/10W,TP,1608	
R667	2007-000084	R-CHIP;4.7Kohm,5%,1/10W,TP,1608	
R668	2001-000780	R-CARBON;470OHM,5%,1/8W,AA,TP,1.8X3.2MM	
R669	2001-000780	R-CARBON;470OHM,5%,1/8W,AA,TP,1.8X3.2MM	
R670	2001-000734	R-CARBON;4.7KOHM,5%,1/8W,AA,TP,1.8X3.2M	
R671	2001-000734	R-CARBON;4.7KOHM,5%,1/8W,AA,TP,1.8X3.2M	
R672	2001-000734	R-CARBON;4.7KOHM,5%,1/8W,AA,TP,1.8X3.2M	
R673	2001-000429	R-CARBON;1KOHM,5%,1/8W,AA,TP,1.8X3.2MM	
R674	2007-000090	R-CHIP;10Kohm,5%,1/10W,TP,1608	
R675	2001-000032	R-CARBON;180OHM,5%,1/4W,AA,TP,2.4X6.4MM	
R676	2001-000633	R-CARBON;30KOHM,5%,1/8W,AA,TP,1.8X3.2MM	
R678	2007-000094	R-CHIP;22Kohm,5%,1/10W,TP,1608	
R679	2007-000075	R-CHIP;220ohm,5%,1/10W,TP,1608	
R682	2007-000094	R-CHIP;22Kohm,5%,1/10W,TP,1608	
R685	2001-000812	R-CARBON;5.6KOHM,5%,1/8W,AA,TP,1.8X3.2M	
R686	2007-000655	R-CHIP;27Kohm,5%,1/10W,TP,1608	
R691	2007-000075	R-CHIP;220ohm,5%,1/10W,TP,1608	
R693	2007-000097	R-CHIP;47Kohm,5%,1/10W,TP,1608	
R694	2007-000097	R-CHIP;47Kohm,5%,1/10W,TP,1608	
R698	2001-000290	R-CARBON;10KOHM,5%,1/8W,AA,TP,1.8X3.2MM	
S602	0603-001134	PHOTO TR;-,30V,4V,50mA,75mW,TRAY	
SW601	AC34-00005A	SWITCH MODE;-,-,-,-,-,-,-,-,-,-,-,-,-,-,-,-	
SW602	AC34-00006A	SWITCH-REC;-,-,-,-,-,-,-,-,-,-,-,-,-,-,-,-	
W666	2007-000070	R-CHIP;0ohm,5%,1/10W,TP,1608	Not used SECAM
XT601	2801-003318	CRYSTAL-UNIT;32.768KHz,20ppm,	BACK-UP 1HOUR Only
XT602	2801-003139	CRYSTAL-UNIT;8MHz,50ppm,28-AAA,22pF,80oh	

AUDIO/VIDEO PARTS

Loc. No.	Part No.	Description	Remark
C315	2203-000975	C-CER,CHIP;47nF,10%,25V,X7R,TP,1608,-	
C317	2401-000588	C-AL;1uF,20%,50V,GP,TP,3x5,2.5	
C318	2401-000588	C-AL;1uF,20%,50V,GP,TP,3x5,2.5	
C319	2203-000843	C-CER,CHIP;39nF,10%,25V,X7R,TP,1608,-	
C320	2203-000975	C-CER,CHIP;47nF,10%,25V,X7R,TP,1608,-	
C321	2203-002398	C-CER,CHIP;22nF,10%,50V,X7R,TP,1608	
C322	2401-000588	C-AL;1uF,20%,50V,GP,TP,3x5,2.5	
C324	2203-000257	C-CER,CHIP;10nF,10%,50V,X7R,TP,1608	
C325	2401-001502	C-AL;47uF,20%,16V,GP,TP,6.3x5,2.5	
C326	2401-000588	C-AL;1uF,20%,50V,GP,TP,3x5,2.5	
C327	2203-001211	C-CER,CHIP;8.2nF,10%,50V,X7R,TP,1608,-	
C328	2203-000257	C-CER,CHIP;10nF,10%,50V,X7R,TP,1608	
C329	2203-005148	C-CER,CHIP;100nF,10%,16V,X7R,TP,1608	
C330	2203-000975	C-CER,CHIP;47nF,10%,25V,X7R,TP,1608,-	
C331	2203-005148	C-CER,CHIP;100nF,10%,16V,X7R,TP,1608	
	2007-000070	R-CHIP;0ohm,5%,1/10W,TP,1608	Not used SECAM
C332	2203-000975	C-CER,CHIP;47nF,10%,25V,X7R,TP,1608,-	
C333	2401-000408	C-AL;10uF,20%,16V,GP,TP,3.5x5,2.5	
C334	2203-000975	C-CER,CHIP;47nF,10%,25V,X7R,TP,1608,-	
C334A	2203-000236	C-CER,CHIP;0.1NF,5%,50V,C0G,TP,1608	
C335	2203-001652	C-CER,CHIP;470nF,+80-20%,16V,Y5V,TP,1608	
C336	2203-000975	C-CER,CHIP;47nF,10%,25V,X7R,TP,1608,-	
C337	2203-001652	C-CER,CHIP;470nF,+80-20%,16V,Y5V,TP,1608	
C338	2203-000639	C-CER,CHIP;22nF,10%,50V,X7R,TP,2012	
C339	2401-000408	C-AL;10uF,20%,16V,GP,TP,3.5x5,2.5	
C340	2401-001226	C-AL;4.7uF,20%,16V,BP,TP,4x7,5mm	
C341	2401-003107	C-AL;47uF,20%,16V,GP,TP,5x7,5	
C342	2202-002037	C-CERAMIC,MLC-AXIAL;100nF,80-20%,50V,Y5V	
C343	2203-005065	C-CER,CHIP;1000nF,+80-20%,10V,Y5V,-,1608	
C344	2203-000315	C-CER,CHIP;0.12NF,5%,50V,C0G,TP,1608	
C345	2203-001607	C-CER,CHIP;0.22nF,5%,50V,NP0,-,1608	
C347	2203-005065	C-CER,CHIP;1000nF,+80-20%,10V,Y5V,-,1608	
C348	2203-005148	C-CER,CHIP;100nF,10%,16V,X7R,TP,1608	
C349	2203-005065	C-CER,CHIP;1000nF,+80-20%,10V,Y5V,-,1608	
C350	2203-005148	C-CER,CHIP;100nF,10%,16V,X7R,TP,1608	
C351	2401-003107	C-AL;47uF,20%,16V,GP,TP,5x7,5	
C352	2401-000588	C-AL;1uF,20%,50V,GP,TP,3x5,2.5	
C353	2401-000588	C-AL;1uF,20%,50V,GP,TP,3x5,2.5	
C354	2401-001502	C-AL;47uF,20%,16V,GP,TP,6.3x5,2.5	
C355	2203-000975	C-CER,CHIP;47nF,10%,25V,X7R,TP,1608,-	
C355A	2203-000236	C-CER,CHIP;0.1NF,5%,50V,C0G,TP,1608	
C380	2203-002398	C-CER,CHIP;22nF,10%,50V,X7R,TP,1608	
C384	2203-005148	C-CER,CHIP;100nF,10%,16V,X7R,TP,1608	
C385	2401-002165	C-AL;100uF,20%,16V,GP,TP,6.3x7,5	
C392	2203-000257	C-CER,CHIP;10nF,10%,50V,X7R,TP,1608	
C3A01	2401-002299	C-AL;4.7uF,20%,50V,GP,TP,5x7,5	
C3A02	2401-000922	C-AL;22uF,20%,16V,GP,TP,5x5,5	
C3A08	2203-000257	C-CER,CHIP;10nF,10%,50V,X7R,TP,1608	
C3A09	2203-001103	C-CER,CHIP;6.8nF,10%,50V,X7R,TP,1608,-	
C3A10	2203-001211	C-CER,CHIP;8.2nF,10%,50V,X7R,TP,1608,-	
C3A11	2301-001680	C-FILM,PEF;15nF,5%,50V,TP,6.3x3x7mm,-	
C3A12	2401-002095	C-AL;47uF,20%,25V,GP,TP,6.3x5,5	
C3A14	2202-000263	C-CERAMIC,MLC-AXIAL;470pF,10%,50V,Y5P,TP	
C3A15	2203-000257	C-CER,CHIP;10nF,10%,50V,X7R,TP,1608	
C3A16	2401-002299	C-AL;4.7uF,20%,50V,GP,TP,5x7,5	
C3A17	2401-000414	C-AL;10uF,20%,16V,GP,TP,4x7,5	
C3A18	2203-001126	C-CER,CHIP;0.68nF,10%,50V,X7R,TP,1608	
C3A21A	2203-001554	C-CER,CHIP;1.8nF,10%,50V,X7R,TP,1608	
C3A23	2401-002069	C-AL;33uF,20%,16V,GP,TP,6.3x5,5	
C3A24	2203-005148	C-CER,CHIP;100nF,10%,16V,X7R,TP,1608	
C3A29	2203-005148	C-CER,CHIP;100nF,10%,16V,X7R,TP,1608	
C3A30	2401-001502	C-AL;47uF,20%,16V,GP,TP,6.3x5,2.5	
C3A40	2401-000414	C-AL;10uF,20%,16V,GP,TP,4x7,5	
C3A41	2401-000588	C-AL;1uF,20%,50V,GP,TP,3x5,2.5	
C3A70	2203-001126	C-CER,CHIP;0.68nF,10%,50V,X7R,TP,1608	
C3A71	2007-000070	R-CHIP;0ohm,5%,1/10W,TP,1608	
CN301	3708-000391	CONNECTOR-FPC/FFC/PIC;10P,1.25MM,STRAIGH	
CN3A01	3708-001165	CONNECTOR-FPC/FFC/PIC;6P,1.25MM,STRAIGHT	
CN3A02	AC37-00028A	CONNECTOR-SOCKET;-,X-11,T9.0,W8.5,PBT NT	
CN3A1S	3809-001206	CABLE-FLAT;30V,-20to+80C,140mm,6P,1.25mm	
D301	0401-000101	DIODE-SWITCHING;1N4148,75V,150MA,DO-35,T	
D302	0402-000127	DIODE-RECTIFIER;1N4002,100V,1A,DO-41,TP	
D303	0401-000101	DIODE-SWITCHING;1N4148,75V,150MA,DO-35,T	
FL3A01	2702-000166	INDUCTOR-RADIAL;47uH,5%,6.0x6.4mm	
IC301	1204-002140	IC-VIDEO PROCESS;LA71750EM-MPB-E,QFP,100	
L301	2701-000002	INDUCTOR-AXIAL;100UH,10%,4298	
L301A	2701-000002	INDUCTOR-AXIAL;100UH,10%,4298	
L302	2701-000002	INDUCTOR-AXIAL;100UH,10%,4298	
L303	2701-000002	INDUCTOR-AXIAL;100UH,10%,4298	
L304	3301-000297	BEAD-AXIAL;25ohm,3.6x1.2x5.7mm,,TP,,,	
L370	2701-000113	INDUCTOR-AXIAL;100UH,5%,2534	
L3A01	2702-000120	INDUCTOR-RADIAL;15000uH,5%,6.2x7.4mm	
L3A02	2701-000002	INDUCTOR-AXIAL;100UH,10%,4298	
L3A03	2701-000002	INDUCTOR-AXIAL;100UH,10%,4298	
L3A70	2702-000120	INDUCTOR-RADIAL;15000uH,5%,6.2x7.4mm	
Q302	0501-000341	TR-SMALL SIGNAL;KSC1623-L,NPN,200mW,SOT-	SECAM Only
Q351	0501-000002	TR-SMALL SIGNAL;KSA812,PNP,150MW,SOT-23,	
Q3A01	0501-000398	TR-SMALL SIGNAL;KSC945,NPN,250mW,TO-92,T	
Q3A02	0501-000303	TR-SMALL SIGNAL;KSA733,PNP,250mW,TO-92,T	
Q3A03	0501-000442	TR-SMALL SIGNAL;KTC3203-Y,NPN,400mW,TO-9	
Q3A04	0501-000442	TR-SMALL SIGNAL;KTC3203-Y,NPN,400mW,TO-9	
Q3A05	0501-000442	TR-SMALL SIGNAL;KTC3203-Y,NPN,400mW,TO-9	
Q3A06	0501-000303	TR-SMALL SIGNAL;KSA733,PNP,250mW,TO-92,T	
R315	2007-000122	R-CHIP;1.2Kohm,5%,1/10W,TP,1608	
R316	2007-001179	R-CHIP;8.2Kohm,5%,1/10W,TP,1608	
R320	2007-000458	R-CHIP;18Kohm,5%,1/10W,TP,1608	
R321	2007-000090	R-CHIP;10Kohm,5%,1/10W,TP,1608	
R322	2007-000458	R-CHIP;18Kohm,5%,1/10W,TP,1608	
R323	2007-000125	R-CHIP;3.9Kohm,5%,1/10W,TP,1608	

Loc.No	Part No	Description : Specification	Remark
R324	2007-000079	R-CHIP;1.8Kohm,5%,1/10W,TP,1608	SECAM Only
R325	2001-000281	R-CARBON;1000HM,5%,1/8W,AA,TP,1.8X3.2MM	
R326	2001-000281	R-CARBON;1000HM,5%,1/8W,AA,TP,1.8X3.2MM	
R327	2007-000084	R-CHIP;4.7Kohm,5%,1/10W,TP,1608	
R328	2007-000122	R-CHIP;1.2Kohm,5%,1/10W,TP,1608	
R329	2007-000081	R-CHIP;2.7Kohm,5%,1/10W,TP,1608	
R330	2007-000087	R-CHIP;6.8Kohm,5%,1/10W,TP,1608	
R331	2007-000079	R-CHIP;1.8Kohm,5%,1/10W,TP,1608	
R333	2007-001239	R-CHIP;56Kohm,5%,1/8W,TP,2012	
R334	2007-000122	R-CHIP;1.5Kohm,5%,1/10W,TP,1608	
R335	2001-000281	R-CARBON;1000HM,5%,1/8W,AA,TP,1.8X3.2MM	
R350	2007-000123	R-CHIP;1.5Kohm,5%,1/10W,TP,1608	SECAM Only
R360	2007-001195	R-CHIP;820Kohm,5%,1/10W,TP,1608	
R371	2007-000119	R-CHIP;560ohm,5%,1/10W,TP,1608	
R372	2007-000078	R-CHIP;1Kohm,5%,1/10W,TP,1608	
R373	2007-000093	R-CHIP;20Kohm,5%,1/10W,TP,1608	
R380	2007-000124	R-CHIP;2.2Kohm,5%,1/10W,TP,1608	
R3A01	2007-000090	R-CHIP;10Kohm,5%,1/10W,TP,1608	
R3A04	2001-000221	R-CARBON;1.2KOHM,5%,1/8W,AA,TP,1.8X3.2M	
R3A05	2007-000615	R-CHIP;24Kohm,5%,1/10W,TP,1608	
R3A06	2007-000539	R-CHIP;200ohm,5%,1/10W,TP,1608	
R3A07	2007-000133	R-CHIP;330Kohm,5%,1/10W,TP,1608	
R3A08	2007-000091	R-CHIP;12Kohm,5%,1/10W,TP,1608	
R3A09	2007-000070	R-CHIP;0ohm,5%,1/10W,TP,1608	
R3A11	2007-000124	R-CHIP;2.2Kohm,5%,1/10W,TP,1608	
R3A12	2007-000074	R-CHIP;100ohm,5%,1/10W,TP,1608	
R3A13	2007-000097	R-CHIP;47Kohm,5%,1/10W,TP,1608	
R3A14	2007-000094	R-CHIP;22Kohm,5%,1/10W,TP,1608	
R3A16	2007-000090	R-CHIP;10Kohm,5%,1/10W,TP,1608	
R3A17	2007-000124	R-CHIP;2.2Kohm,5%,1/10W,TP,1608	
R3A18	2007-000124	R-CHIP;2.2Kohm,5%,1/10W,TP,1608	
R3A23	2007-000091	R-CHIP;12Kohm,5%,1/10W,TP,1608	
R3A24	2007-000094	R-CHIP;22Kohm,5%,1/10W,TP,1608	
R3A25	2001-000221	R-CARBON;1.2KOHM,5%,1/8W,AA,TP,1.8X3.2M	
R3A26	2007-000090	R-CHIP;10Kohm,5%,1/10W,TP,1608	
R3A28	2007-000124	R-CHIP;2.2Kohm,5%,1/10W,TP,1608	
R3A50	2001-000800	R-CARBON;5.1KOHM,5%,1/8W,AA,TP,1.8X3.2M	
R3A51	2007-000090	R-CHIP;10Kohm,5%,1/10W,TP,1608	
R3A60	2007-000704	R-CHIP;3.6Kohm,5%,1/10W,TP,1608	
R3A70	2007-000084	R-CHIP;4.7Kohm,5%,1/10W,TP,1608	
W177	2001-000429	R-CARBON;1KOHM,5%,1/8W,AA,TP,1.8X3.2MM	
W178	2001-000429	R-CARBON;1KOHM,5%,1/8W,AA,TP,1.8X3.2MM	
W205	2001-000281	R-CARBON;1000HM,5%,1/8W,AA,TP,1.8X3.2MM	
W206	2001-000281	R-CARBON;1000HM,5%,1/8W,AA,TP,1.8X3.2MM	
W311	2701-000002	INDUCTOR-AXIAL;100UH,10%,4298	
X7301	2801-001397	CRYSTAL-UNIT;4.433619MHz,20ppm,28-AAA,S,	

TM-BLOCK PARTS

C401	2401-003107	C-AL;47uF,20%,16V,GP,TP,5x7.5	
C402	2203-002398	C-CER,CHIP;22nF,10%,50V,X7R,TP,1608	
C403	2401-001502	C-AL;47uF,20%,16V,GP,TP,6.3x5.2.5	
C404	2401-001077	C-AL;330nF,20%,50V,GP,TP,4x7mm,5mm	
C405	2401-002438	C-AL;47uF,20%,50V,WT,TP,6.3x11.5	
C406	2203-000257	C-CER,CHIP;10nF,10%,50V,X7R,TP,1608	
C407	2401-003107	C-AL;47uF,20%,16V,GP,TP,5x7.5	Not used SECAM
C409	2401-002299	C-AL;4.7uF,20%,50V,GP,TP,5x7.	Not used SECAM
C410	2203-000257	C-CER,CHIP;10nF,10%,50V,X7R,TP,1608	
C401	0402-000127	DIODE-RECTIFIER;1N4002,100V,1A,DO-41,TP	
L401	AC27-12001N	COIL CHOKE;10UH-15%,RA,K-30,Q80,150KHZ,-	
Q401	0501-000002	TR-SMALL SIGNAL;KSA812,PNP,150MW,SOT-23,	
R401	2001-000786	R-CARBON;47KOHM,5%,1/8W,AA,TP	Not used SECAM
R402	2001-000281	R-CARBON;1000HM,5%,1/8W,AA,TP	Not used SECAM
R403	2001-000281	R-CARBON;1000HM,5%,1/8W,AA,TP,1.8X3.2MM	
R404	2001-000281	R-CARBON;1000HM,5%,1/8W,AA,TP,1.8X3.2MM	
R405	2007-001010	R-CHIP;51Kohm,5%,1/10W,TP,160	Not used SECAM
R408	2007-000122	R-CHIP;1.2Kohm,5%,1/10W,TP,16	Not used SECAM

Loc.No	Part No	Description : Specification	Remark
R440	2001-000352	R-CARBON;150OHM,5%,1/8W,AA,TP,1.8X3.2MM	
R441	2007-000616	R-CHIP;120ohm,5%,1/10W,TP,1608	
TM401	AC40-00031A	TM BLOCK;TCPU861PD20A,PAL B/G + SECAM,	SECAM Only
	AC40-00032A	TM BLOCK;TCM0610PD20A,PAL I,	U.K Only
	AC40-00029A	TM BLOCK;TCM0801PD20A,PAL B/	Other Only
W404	2001-000780	R-CARBON;470OHM,5%,1/8W,AA,TP,1.8X3.2MM	
ZD401	0403-000390	DIODE-ZENER;UZP33B,31.4-34.6V,1000MW,DO-	

HI-FI PARTS

C501	2401-000408	C-AL;10uF,20%,16V,GP,TP,3.5x5.2.5	
C502	2203-005148	C-CER,CHIP;100nF,10%,16V,X7R,TP,1608	
C503	2401-000909	C-AL;22uF,20%,16V,GP,TP,5x5.2.5	
C504	2401-000408	C-AL;10uF,20%,16V,GP,TP,3.5x5.2.5	
C505	2401-001249	C-AL;4.7uF,20%,,35V,GP,TP,4x5.2.5	
C506	2203-000257	C-CER,CHIP;10nF,10%,50V,X7R,TP,1608	
C507	2401-000909	C-AL;22uF,20%,16V,GP,TP,5x5.2.5	
C508	2203-000888	C-CER,CHIP;4.7nF,10%,50V,X7R,TP,1608	
C510	2401-001502	C-AL;47uF,20%,16V,GP,TP,6.3x5.2.5	
C511	2203-000257	C-CER,CHIP;10nF,10%,50V,X7R,TP,1608	
C513	2203-000257	C-CER,CHIP;10nF,10%,50V,X7R,TP,1608	
C517	2203-000888	C-CER,CHIP;4.7nF,10%,50V,X7R,TP,1608	
C518	2401-000909	C-AL;22uF,20%,16V,GP,TP,5x5.2.5	
C519	2203-000257	C-CER,CHIP;10nF,10%,50V,X7R,TP,1608	
C520	2401-001249	C-AL;4.7uF,20%,,35V,GP,TP,4x5.2.5	
C521	2401-000408	C-AL;10uF,20%,16V,GP,TP,3.5x5.2.5	
C522	2203-005148	C-CER,CHIP;100nF,10%,16V,X7R,TP,1608	
C523	2203-005148	C-CER,CHIP;100nF,10%,16V,X7R,TP,1608	
C524	2401-001249	C-AL;4.7uF,20%,,35V,GP,TP,4x5.2.5	
C525	2401-001249	C-AL;4.7uF,20%,,35V,GP,TP,4x5.2.5	
C526	2401-002165	C-AL;100uF,20%,,16V,GP,TP,6.3x7.5	
C527	2202-000797	C-CERAMIC,MLC-AXIAL;10NF,30%,,16V,Y5S,TP,	
C529	2401-001250	C-AL;4.7uF,20%,,35V,GP,TP,4x5.5	
C530	2203-005148	C-CER,CHIP;100nF,10%,16V,X7R,TP,1608	
C535	2203-005148	C-CER,CHIP;100nF,10%,16V,X7R,TP,1608	
C536	2203-005148	C-CER,CHIP;100nF,10%,16V,X7R,TP,1608	
C537	2401-000665	C-AL;2.2uF,20%,,50V,GP,TP,3.5x5.5	
C538	2401-002569	C-AL;2.2uF,20%,,50V,GP,TP,4x5.2.5	
C539	2401-001250	C-AL;4.7uF,20%,,35V,GP,TP,4x5.5	
C540	2401-001250	C-AL;4.7uF,20%,,35V,GP,TP,4x5.5	
C541	2401-000588	C-AL;1uF,20%,50V,GP,TP,3x5,2.5	
D501	0402-000127	DIODE-RECTIFIER;1N4002,100V,1A,DO-41,TP	
IC501	1204-001920	IC-AUDIO PROCESSOR;LA72646M,QFP,80P,14X1	
R501	2001-000766	R-CARBON;43KOHM,5%,1/8W,AA,TP,1.8X3.2MM	
R502	2007-001056	R-CHIP;6.2Kohm,5%,1/10W,TP,1608	
R503	2001-000780	R-CARBON;470OHM,5%,1/8W,AA,TP,1.8X3.2MM	
R505	2001-000766	R-CARBON;43KOHM,5%,1/8W,AA,TP,1.8X3.2MM	
R506	2007-001056	R-CHIP;6.2Kohm,5%,1/10W,TP,1608	
R507	2001-000786	R-CARBON;43KOHM,5%,1/8W,AA,TP,1.8X3.2MM	
R508	2007-001056	R-CHIP;6.2Kohm,5%,1/10W,TP,1608	
R509	2007-000087	R-CHIP;6.8Kohm,5%,1/10W,TP,1608	
R510	2007-000913	R-CHIP,43Kohm,5%,1/10W,TP,1608	
R511	2007-000090	R-CHIP;10Kohm,5%,1/10W,TP,1608	
R512	2001-000660	R-CARBON;33KOHM,5%,1/8W,AA,TP,1.8X3.2MM	
R517	2007-000087	R-CHIP;6.8Kohm,5%,1/10W,TP,1608	
R518	2007-000913	R-CHIP,43Kohm,5%,1/10W,TP,1608	
R519	2007-001056	R-CHIP;6.2Kohm,5%,1/10W,TP,1608	
R520	2001-000766	R-CARBON;43KOHM,5%,1/8W,AA,TP,1.8X3.2MM	
R521	2007-000087	R-CHIP;6.8Kohm,5%,1/10W,TP,1608	
R522	2007-001071	R-CHIP;6.8Kohm,5%,1/8W,TP,2012	
R533	2007-000003	R-CHIP,43Kohm,5%,1/8W,TP,2012	
R540	2001-000766	R-CARBON;43KOHM,5%,1/8W,AA,TP,1.8X3.2MM	
R545	2007-000512	R-CHIP;2.4Kohm,5%,1/10W,TP,1608	
R546	2007-000079	R-CHIP;1Kohm,5%,1/10W,TP,1608	
R547	2007-000078	R-CHIP;1Kohm,5%,1/10W,TP,1608	
R550	2001-000766	R-CARBON;43KOHM,5%,1/8W,AA,TP,1.8X3.2MM	
R551	2007-000093	R-CHIP;20Kohm,5%,1/10W,TP,1608	

Loc.No	Part No	Description : Specification	Remark
R552	2007-000913	R-CHIP,43Kohm,5%,1/10W,TP,1608	
R553	2007-000093	R-CHIP;20Kohm,5%,1/10W,TP,1608	
R570	2007-000078	R-CHIP;1Kohm,5%,1/10W,TP,1608	
R571	2007-000098	R-CHIP;56Kohm,5%,1/10W,TP,1608	

SECAM PARTS

C2S01	2203-000257	C-CER,CHIP;10nF,10%,50V,X7R,TP,1608	SECAM Only
C2S02	2401-000598	C-AL;1uF,20%,50V,GP,TP,4x7.5	SECAM Only
C2S03	2203-000257	C-CER,CHIP;10nF,10%,50V,X7R,TP,1608	SECAM Only
C2S04	2401-000598	C-AL;1uF,20%,50V,GP,TP,4x7.5	SECAM Only
C2S05	2203-005148	C-CER,CHIP;100nF,10%,16V,X7R,TP,1608	SECAM Only
C2S06	2401-001324	C-AL;0.47uF,20%,,50V,GP,BK,,DS,2.5	SECAM Only
C2S07	2007-000070	R-CHIP,0ohm,5%,1/10W,TP,1608	SECAM Only
C2S08	2203-005148	C-CER,CHIP;100nF,10%,16V,X7R,TP,1608	SECAM Only
C2S09	2401-001324	C-AL;0.47uF,20%,,50V,GP,BK,,DS,2.5	SECAM Only
C2S10	2401-003107	C-AL;47uF,20%,,16V,GP,TP,5x7.5	SECAM Only
C2S11	2203-005148	C-CER,CHIP;100nF,10%,16V,X7R,TP,1608	SECAM Only
C2S12A	2203-000491	C-CER,CHIP;2.2nF,10%,,50V,X7R,TP,1608,-	SECAM Only
C2S14	2401-000665	C-AL;2.2uF,20%,,50V,GP,TP,3.5x5.5	SECAM Only
C2S14A	2203-000491	C-CER,CHIP;2.2nF,10%,,50V,X7R,TP,1608,-	SECAM Only
C2S15	2203-000440	C-CER,CHIP;1nF,10%,,50V,X7R,TP,1608,-	SECAM Only
IC2S01	1204-001921	IC-CHROMA;LA7610DM,SOP,30P,375MIL,PLASTI	SECAM Only
RS501	2007-000078	R-CHIP;1Kohm,5%,1/10W,TP,1608	SECAM Only
RS502	2001-000435	R-CARBON;1MOHM,5%,1/8W,AA,TP,1.8X3.2MM	SECAM Only

A2/NICAM PARTS

C4N01	2203-000140	C-CER,CHIP;1.5nF,10%,,50V,X7R,TP,1608,-	
C4N02	2401-000408	C-AL;10uF,20%,,16V,GP,TP,3.5x5.2.5	
C4N03	2203-001607	C-CER,CHIP;0.22nF,5%,,50V,NPO,,-,1608	
C4N04	2401-000665	C-AL;2.2uF,20%,,50V,GP,TP,3.5x5.5	
C4N05	2203-000257	C-CER,CHIP;10nF,10%,,50V,X7R,TP,1608	
C4N06	2203-000257	C-CER,CHIP;10nF,10%,,50V,X7R,TP,1608	
C4N07	2203-001656	C-CER,CHIP;0.47nF,5%,,50V,NPO,TP,1608	
C4N08	2203-000140	C-CER,CHIP;1.5nF,10%,,50V,X7R,TP,1608,-	
C4N09	2401-000408	C-AL;10uF,20%,,16V,GP,TP,3.5x5.2.5	
C4N10	2401-000408	C-AL;10uF,20%,,16V,GP,TP,3.5x5.2.5	
C4N11	2401-002186	C-AL;3.3UF,20%,,50V,GP,BK,,4X5,2.5	
C4N12	2203-005148	C-CER,CHIP;100nF,10%,,16V,X7R,TP,1608	
C4N13	2203-005148	C-CER,CHIP;100nF,10%,,16V,X7R,TP,1608	
C4N14	2401-000408	C-AL;10uF,20%,,16V,GP,TP,3.5x5.2.5	
C4N15	2203-005148	C-CER,CHIP;100nF,10%,,16V,X7R,TP,1608	
C4N16	2401-001502	C-AL;47uF,20%,,16V,GP,TP,6.3x5,2.5	
C4N17	2203-001656	C-CER,CHIP;0.47nF,5%,,50V,NPO,TP,1608	
C4N18	2203-001656	C-CER,CHIP;0.47nF,5%,,50V,NPO,TP,1608	
C4N19	2203-000998	C-CER,CHIP;0.0047NF,5%,,50V,C0G,TP,1608	
C4N21	2201-002069	C-CERAMIC,DISC;0.0015NF,0.25PF,50V,C0G,T	
C4N22	2201-002069	C-CERAMIC,DISC;0.0015NF,0.25PF,50V,C0G,T	
C4N23	2401-000598	C-AL;1uF,20%,,50V,GP,TP,4x7.5	
C4N24	2401-000598	C-AL;1uF,20%,,50V,GP,TP,4x7.5	
C4N25	2203-005148	C-CER,CHIP;100nF,10%,,16V,X7R,TP,1608	
C4N30	2203-000257	C-CER,CHIP;10nF,10%,,50V,X7R,TP,1608	
D4N01	0401-000101	DIODE-SWITCHING;1N4148,75V,150MA,DO-35,T	
D4N02	0401-000101	DIODE-SWITCHING;1N4148,75V,150MA,DO-35,T	
IC4N01	1204-001765	IC-AUDIO PROCESSOR;MSP3417D,PQFP,,PQFP,4	
	1204-001766	IC-AUDIO PROCESSOR;MSP3407D/P	A2 Only
L4N01	2702-000160	INDUCTOR-RADIAL;4.7uH,10%,6.0x6.4mm	
L4N02	2702-000105	INDUCTOR-RADIAL;100uH,10%,6.2x7.4mm	
L4N03	2702-000160	INDUCTOR-RADIAL;4.7uH,10%,6.0x6.4mm	
L4N04	3301-000297	BEAD-AXIAL;25ohm,3.6x1.2x5.7mm,,TP,,,	
R4N01	2007-000078	R-CHIP;1Kohm,5%,1/10W,TP,1608	
R4N02	2001-000281	R-CARBON;1000HM,5%,1/8W,AA,TP,1.8X3.2MM	
R4N03	2001-000281	R-CARBON;1000HM,5%,1/8W,AA,TP,1.8X3.2MM	
R4N04	2001-000563	R-CARBON;27KOHM,5%,1/8W,AA,TP,1.8X3.2MM	
R4N05	2007-000074	R-CHIP;100ohm,5%,1/10W,TP,1608	
R4N06	2007-000074	R-CHIP;100ohm,5%,1/10W,TP,1608	
XT4N01	2801-004096	CRYSTAL-UNIT;18.432MHZ,20PPM,28-AAA,;6PF	

OSD/VPS/PDC PARTS

C6P01	2203-000257	C-CER,CHIP;10nF,10%,50V,X7R,TP,1608	
C6P04	2203-000681	C-CER,CHIP;0.027NF,5%,50V,C0G,TP,1608	
C6P05	2203-000681	C-CER,CHIP;0.027NF,5%,50V,C0G,TP,1608	
C6P06	2203-000440	C-CER,CHIP;1nF,10%,,50V,X7R,TP,1608,-	
C6P07	2401-002299	C-AL;4.7uF,20%,,50V,GP,TP,5x7.5	
C6P08	2203-001071	C-CER,CHIP;0.056NF,5%,50V,C0G,TP,1608	
C6P10	2401-000598	C-AL;1uF,20%,,50V,GP,TP,4x7.5	
C6P11	2401-000598	C-AL;1uF,20%,,50V,GP,TP,4x7.5	
C6P12	2401-002165	C-AL;100uF,20%,,16V,GP,TP,6.3x7.5	
C6P13	2203-005148	C-CER,CHIP;100nF,10%,,16V,X7R,TP,1608	
C6P15	2203-001140	C-CER,CHIP;68nF,10%,,16V,X7R,TP,1608	
D6P01	0401-000101	DIODE-SWITCHING;1N4148,75V,150MA,DO-35,T	
IC6P01	1204-001794	IC-AUDIO PROCESSOR;LC74775NM-9808,MFP,30	
L6P01	2701-000002	INDUCTOR-AXIAL;100UH,10%,4298	
L6P03	2701-000160	INDUCTOR-AXIAL;22uH,5%,2434	
L6P05	2701-000165	INDUCTOR-AXIAL;27uH,5%,2434	
Q6P01	0501-000303	TR-SMALL SIGNAL;KSA733,PNP,250mW,TO-92,T	
Q6P02	0501-000303	TR-SMALL SIGNAL;KSA733,PNP,250mW,TO-92,T	
Q6P04	0501-000398	TR-SMALL SIGNAL;KSC945,NPN,250mW,TO-92,T	
R6P01	2001-000281	R-CARBON;1000HM,5%,1/8W,AA,TP,1.8X3.2MM	
R6P02	2001-000281	R-CARBON;1000HM,5%,1/8W,AA,TP,1.8X3.2MM	
R6P03	2007-000081	R-CHIP;2.7Kohm,5%,1/10W,TP,1608	
R6P04	2007-000090	R-CHIP;10Kohm,5%,1/10W,TP,1608	
R6P05	2007-000090	R-CHIP;10Kohm,5%,1/10W,TP,1608	
R6P06	2007-000086	R-CHIP;5.6Kohm,5%,1/10W,TP,1608	
R6P07	2007-000075	R-CHIP;220ohm,5%,1/10W,TP,1608	
R6P08	2001-000005	R-CARBON;390ohm,5%,1/8W,AA,TP,1.8x3.2mm	
R6P09	2007-000079	R-CHIP;0ohm,5%,1/10W,TP,1608	
R6P10	2001-000515	R-CARBON;220OHM,5%,1/8W,AA,TP,1.8X3.2MM	
R6P12	2001-000734	R-CARBON,4.7KOHM,5%,1/8W,AA,TP,1.8X3.2M	
R6P13	2007-000097	R-CHIP;47Kohm,5%,1/10W,TP,1608	
R6P14	2007-000123	R-CHIP;1.5Kohm,5%,1/10W,TP,1608	

INPUT-OUTPUT PARTS

C812	2401-000922	C-AL;22uF,20%,,16V,GP,TP,5x5.5	
C813	2401-000922	C-AL;22uF,20%,,16V,GP,TP,5x5.5	
C814	2401-000922	C-AL;22uF,20%,,16V,GP,TP,5x5.5	
C815	2401-000922	C-AL;22uF,20%,,16V,GP,TP,5x5.5	
C816	2401-002165	C-AL;100uF,20%,,16V,GP,TP,6.3x7.5	
C817	2203-000257	C-CER,CHIP;10nF,10%,50V,X7R,TP,1608	
C818	2203-000783	C-CER,CHIP;0.33NF,5%,50V,C0G,TP,1608	
C819	2203-000783	C-CER,CHIP;0.33NF,5%,50V,C0G,TP,1608	
C820	2203-000783	C-CER,CHIP;0.33NF,5%,50V,C0G,TP,1608	
C821	2203-000783	C-CER,CHIP;0.33NF,5%,50V,C0G,TP,1608	
C822A	2203-000236	C-CER,CHIP;0.1NF,5%,50V,C0G,TP,1608	
C823	2203-000783	C-CER,CHIP;0.33NF,5%,50V,C0G,TP,1608	
C824	2203-000783	C-CER,CHIP;0.33NF,5%,50V,C0G,TP,1608	
C825	2203-000783	C-CER,CHIP;0.33NF,5%,50V,C0G,TP,1608	
C826	2203-000783	C-CER,CHIP;0.33NF,5%,50V,C0G,TP,1608	
C835	2401-001479	C-AL;470UF,20%,,10V,GP,TP,6.3*11MM,-	
C837	2203-000257	C-CER,CHIP;10nF,10%,50V,X7R,TP,1608	
C840	2203-005148	C-CER,CHIP;100nF,10%,,16V,X7R,TP,1608	
C851	2401-000922	C-AL;22uF,20%,,16V,GP,TP,5x5.5	
C852	2401-000922	C-AL;22uF,20%,,16V,GP,TP,5x5.5	
C853	2203-000491	C-CER,CHIP;2.2nF,10%,,50V,X7R,TP,1608,-	
C854	2203-000491	C-CER,CHIP;2.2nF,10%,,50V,X7R,TP,1608,-	
C857	2203-000888	C-CER,CHIP;4.7nF,10%,,50V,X7R,TP,1608	
C858	2401-000922	C-AL;22uF,20%,,16V,GP,TP,5x5.5	
C890	2401-000922	C-AL;22uF,20%,,16V,GP,TP,5x5.5	
D805	0401-000101	DIODE-SWITCHING;1N4148,75V,150MA,DO-35,T	
IC802	3801-002741	IC-CMOS LOGIC,BU4053BCFV,MUX,SSOP;16P,17	
J03C	2007-000070	R-CHIP;0ohm,5%,1/10W,TP,1608	
J330	2007-000070	R-CHIP;0ohm,5%,1/10W,TP,1608	
J50A	2007-000070	R-CHIP;0ohm,5%,1/10W,TP,1608	

Electrical Parts List

J905	2007-000070	R-CHIP,0ohm,5%,1/10W,TP,1608	
J910	2007-000070	R-CHIP,0ohm,5%,1/10W,TP,1608	
J911	2007-000070	R-CHIP,0ohm,5%,1/10W,TP,1608	
J912	2007-000070	R-CHIP,0ohm,5%,1/10W,TP,1608	
J913	2007-000070	R-CHIP,0ohm,5%,1/10W,TP,1608	
J914	2007-000070	R-CHIP,0ohm,5%,1/10W,TP,1608	
JC801	3722-001573	JACK-SCART,42P/ZR,-,SN,BLK/BLU,#20-26	
JC802	AC37-Z20002N	JACK-PIN,3.2mm,DPAE-9836,3P11I,HI-FI,SV	
L803	2701-000181	INDUCTOR-AXIAL,33uH,5%,2434	
L804	2701-000181	INDUCTOR-AXIAL,33uH,5%,2434	
L805	2701-000181	INDUCTOR-AXIAL,33uH,5%,2434	
L806	2701-000181	INDUCTOR-AXIAL,33uH,5%,2434	
L807	2701-000181	INDUCTOR-AXIAL,33uH,5%,2434	
L808	2701-000181	INDUCTOR-AXIAL,33uH,5%,2434	
L809	2701-000181	INDUCTOR-AXIAL,33uH,5%,2434	
L810	2701-000181	INDUCTOR-AXIAL,33uH,5%,2434	
L811	2701-000181	INDUCTOR-AXIAL,33uH,5%,2434	
L812	2701-000181	INDUCTOR-AXIAL,33uH,5%,2434	
L814	AC27-92001M	COIL-INDUCTOR;RH3.5X6.5RS,BEAD(RADIAL)-	
L890	2701-000002	INDUCTOR-AXIAL,100UH,10%,4298	
Q802	0504-000119	TR-DIGITAL;KSR1004,NPN,300mW,47K/47K,TO-	
Q803	0504-000129	TR-DIGITAL;KSR1104,NPN,200mW,47K/47K,SOT	
Q804	0504-000142	TR-DIGITAL;KSR2001,PNP,300mW,4.7K/4.7K,T	
Q806	0504-000152	TR-DIGITAL;KSR2101,PNP,200mW,4.7K/4.7K,S	
Q808	0504-000119	TR-DIGITAL;KSR1004,NPN,300mW,47K/47K,TO-	
Q809	0501-000341	TR-SMALL SIGNAL;KSC1623-L,NPN,200mW,SOT-	
Q810	0501-000341	TR-SMALL SIGNAL;KSC1623-L,NPN,200mW,SOT-	
Q811	0501-000341	TR-SMALL SIGNAL;KSC1623-L,NPN,200mW,SOT-	
Q891A	0501-000398	TR-SMALL SIGNAL;KSC945,NPN,25	Not used SECAM
Q891E	0501-000398	TR-SMALL SIGNAL;KSC945,NPN,25	Not usec SECAM
R801A	2007-000116	R-CHIP,120ohm,5%,1/10W,TP,1608	
R802	2007-000079	R-CHIP,1.8Kohm,5%,1/10W,TP,1608	
R803	2007-000079	R-CHIP,1.8Kohm,5%,1/10W,TP,1608	
R805	2007-000643	R-CHIP,270ohm,5%,1/10W,TP,1608	
R806	2007-000643	R-CHIP,270ohm,5%,1/10W,TP,1608	
R807	2007-001134	R-CHIP,68ohm,5%,1/10W,TP,1608	
R808	2007-001167	R-CHIP,75ohm,5%,1/10W,TP,1608	
R809	2007-001167	R-CHIP,75ohm,5%,1/10W,TP,1608	
R810	2007-000643	R-CHIP,270ohm,5%,1/10W,TP,1608	
R811	2007-000643	R-CHIP,270ohm,5%,1/10W,TP,1608	
R813	2007-000643	R-CHIP,270ohm,5%,1/10W,TP,1608	
R814	2007-000643	R-CHIP,270ohm,5%,1/10W,TP,1608	
R815	2007-000643	R-CHIP,270ohm,5%,1/10W,TP,1608	
R816	2007-000643	R-CHIP,270ohm,5%,1/10W,TP,1608	
R819	2007-000643	R-CHIP,270ohm,5%,1/10W,TP,1608	
R820	2007-000643	R-CHIP,270ohm,5%,1/10W,TP,1608	
R821	2007-000134	R-CHIP,33Kohm,5%,1/10W,TP,1608	
R822	2007-000094	R-CHIP,22Kohm,5%,1/10W,TP,1608	
R822E	2007-001167	R-CHIP;75ohm,5%,1/10W,TP,1608	
R825	2007-000084	R-CHIP,4.7Kohm,5%,1/10W,TP,1608	
R827	2007-000101	R-CHIP,82Kohm,5%,1/10W,TP,1608	
R828	2007-000101	R-CHIP,82Kohm,5%,1/10W,TP,1608	
R829	2007-000101	R-CHIP,82Kohm,5%,1/10W,TP,1608	
R830	2007-000101	R-CHIP,82Kohm,5%,1/10W,TP,1608	
R835	2007-000101	R-CHIP,82Kohm,5%,1/10W,TP,1608	
R836	2007-000101	R-CHIP,82Kohm,5%,1/10W,TP,1608	
R839	2007-000070	R-CHIP,0ohm,5%,1/10W,TP,1608	
R841	2007-000119	R-CHIP,560ohm,5%,1/10W,TP,1608	
R842	2007-000119	R-CHIP,560ohm,5%,1/10W,TP,1608	
R843	2007-000119	R-CHIP,560ohm,5%,1/10W,TP,1608	
R844	2007-001167	R-CHIP;75ohm,5%,1/10W,TP,1608	
[illegible]	[illegible]	[illegible]	
R852	2007-000057	R-CHIP,47Kohm,5%,1/10W,TP,1608	
R891A	2007-000090	R-CHIP,10Kohm,5%,1/10W,TP,160	Not used SECAM
R891E	2007-000090	R-CHIP,10Kohm,5%,1/10W,TP,160	Not used SECAM
R892A	2007-001179	R-CHIP,8.2Kohm,5%,1/10W,TP,1608	
R892B	2007-001179	R-CHIP,8.2Kohm,5%,1/10W,TP,1608	
R893A	2007-000122	R-CHIP,1.2Kohm,5%,1/10W,TP,16	Not used SECAM
R893B	2007-000122	R-CHIP,1.2Kohm,5%,1/10W,TP,16	Not used SECAM
R894A	2007-000555	R-CHIP,27Kohm,5%,1/10W,TP,160	Not used SECAM
R894B	2007-000555	R-CHIP,27Kohm,5%,1/10W,TP,160	Not used SECAM
ZD801	0403-000297	DIODE-ZENER;MTZ5.2B,5.56-6.27V,500MW,DO-	
ZD805	0403-001211	DIODE-ZENER,MTZJ12B,11.8-12.3V,500MW,DO-	
ZD806	0403-001083	DIODE-ZENER;UDZ9.1B,8.85-9.23V,200MW,UMD	
ZD807	0403-001083	DIODE-ZENER;UDZ9.1B,8.85-9.23V,200MW,UMD	
ZD809	0403-001083	DIODE-ZENER;UDZ9.1B,8.85-9.23V,200MW,UMD	
ZD810	0403-001083	DIODE-ZENER;UDZ9.1B,8.85-9.23V,200MW,UMD	
ZD811	0403-000720	DIODE-ZENER;MTZJ9.1B,8.57-9.01V,500MW,DO	
ZD851	0403-000720	DIODE-ZENER;MTZJ9.1B,8.57-9.01V,500MW,DO	
ZD852	0403-000720	DIODE-ZENER;MTZJ9.1B,8.57-9.01V,500MW,DO	
ZD853	0403-000720	DIODE-ZENER;MTZJ9.1B,8.57-9.01V,500MW,DO	
ZD854	0403-000720	DIODE-ZENER;MTZJ9.1B,8.57-9.01V,500MW,DO	
ZD863	0403-001083	DIODE-ZENER;UDZ9.1B,8.85-9.23V,200MW,UMD	
ZD864	0403-000720	DIODE-ZENER;MTZJ9.1B,8.57-9.01V,500MW,DO	
DISPLAY/FUNCTION MATRIX PARTS			
BD701	3301-001419	BEAD-SMD;-,220-,500,TP,-,0.3	
BD702	3301-001419	BEAD-SMD;-,220-,500,TP,-,0.3	
BD703	3301-001419	BEAD-SMD;-,220-,500,TP,-,0.3	
C701	2401-002165	C-AL;100uF,20%,16V,GP,TP,6.3x7.5	
C702	2203-000257	C-CER,CHIP,10nF,10%,50V,X7R,TP,1608	
C703	2203-000440	C-CER,CHIP,1nF,10%,50V,X7R,TP,1608,-	
C706	2203-000239	C-CER,CHIP,0.1NF,5%,50V,C0G,TP,2012	
C707	2401-001952	C-AL;2200uF,20%,10V,WT,TP,10X20MM,5	
C708A	2203-000257	C-CER,CHIP,10nF,10%,50V,X7R,TP,1608	
C712	2203-000491	C-CER,CHIP,2.2nF,10%,50V,X7R,TP,1608,-	
C714	2203-000491	C-CER,CHIP,2.2nF,10%,50V,X7R,TP,1608,-	
CN701	3710-001918	CONNECTOR-SOCKET;BP,1R,2MM,ANGLE,SN	
CN701A	3711-005312	CONNECTOR-HEADER;3WALL,6P,1R,2MM,STRAIGH	
D701	0401-000101	DIODE-SWITCHING;1N4148,75V,150MA,DO-35,T	
D702	0401-000101	DIODE-SWITCHING;1N4148,75V,150MA,DO-35,T	
D703	0401-000101	DIODE-SWITCHING;1N4148,75V,150MA,DO-35,T	
D704	0401-000101	DIODE-SWITCHING;1N4148,75V,150MA,DO-35,T	
D705	0401-000101	DIODE-SWITCHING;1N4148,75V,150MA,DO-35,T	
DT701	AC07-000069A	LED DISPLAY,BCD-9027E,SV-DVD440,5-DIGIT,	
IC701	1003-001561	IC-LED DRIVER;PT6961,SOP,32P,300MIL-,40	
L701	2701-000002	INDUCTOR-AXIAL;100UH,10%,4298	
L702	2701-000002	INDUCTOR-AXIAL;100UH,10%,4298	
R701	2001-000429	R-CARBON;1KOHM,5%,1/8W,AA,TP,1.8X3.2MM	
R702	2007-000078	R-CHIP,1Kohm,5%,1/10W,TP,1608	
R703	2007-000078	R-CHIP,1Kohm,5%,1/10W,TP,1608	
R704	2001-000837	R-CARBON;51KOHM,5%,1/8W,AA,TP,1.8X3.2MM	
R711	2007-000090	R-CHIP,10Kohm,5%,1/10W,TP,1608	
R712	2007-001167	R-CHIP;75ohm,5%,1/10W,TP,1608	
RM701	AC32-00003A	MODULE REMOCON;TSOP2238WE1,38KHZ-,5.08m	
SW701	3404-001182	SWITCH-TACT;DC12V,50MA,100GF,6.0X6.0X5.0	
SW702	3404-001182	SWITCH-TACT;DC12V,50MA,100GF,6.0X6.0X5.0	
SW703	3404-001182	SWITCH-TACT;DC12V,50MA,100GF,6.0X6.0X5.0	
SW704	3404-001182	SWITCH-TACT;DC12V,50MA,100GF,6.0X6.0X5.0	
SW705	3404-001182	SWITCH-TACT;DC12V,50MA,100GF,6.0X6.0X5.0	
SW707	3404-001182	SWITCH-TACT;DC12V,50MA,100GF,6.0X6.0X5.0	
SW708	3404-001182	SWITCH-TACT;DC12V,50MA,100GF,6.0X6.0X5.0	
SW709	3404-001182	SWITCH-TACT;DC12V,50MA,100GF,6.0X6.0X5.0	
SW710	3404-001182	SWITCH-TACT;DC12V,50MA,100GF,6.0X6.0X5.0	
SW711	3404-001182	SWITCH-TACT;DC12V,50MA,100GF,6.0X6.0X5.0	
SW712	3404-001182	SWITCH-TACT;DC12V,50MA,100GF,6.0X6.0X5.0	
SW714	3404-001182	SWITCH-TACT;DC12V,50MA,100GF,6.0X6.0X5.0	
SW715	3404-001182	SWITCH-TACT;DC12V,50MA,100GF,6.0X6.0X5.0	
W735	2202-002037	C-CERAMIC,MLC-AXIAL;100nF,80-20%,50V,Y5V	
W737	2202-002037	C-CERAMIC,MLC-AXIAL;100nF,80-20%,50V,Y5V	
ZD701	0403-000720	DIODE-ZENER;MTZJ9.1B,8.57-9.01V,500MW,DO	

801		**ASSY PCB-MAIN;**	**SV-DVD540A/640 Only**
S.M.P.S. PARTS			
BD1SD1	AC27-92001M	COIL-INDUCTOR;RH3.5X6.5RS,BEAD(RADIAL)-	
BD1SD2	AC27-92001M	COIL-INDUCTOR;RH3.5X6.5RS,BEAD(RADIAL)-	
BD1SS3	AC27-92001M	COIL-INDUCTOR;RH3.5X6.5RS,BEAD(RADIAL)-	
C1SD12	2305-001029	C-FILM,LEAD-PEF;10nF,10%,630V,TP,12x9x12	
C1SD13	2301-000383	C-FILM,LEAD-PEF;10nF,5%,50V,TP,5x7x3.2mm	
C1SD16	2201-000129	C-CERAMIC,DISC;0.1NF,10%,1KV,Y5P,TP,7X4M	
C1SF02	2401-002608	C-AL;33uF,20%,35V,GP,TP,5x11,5	
C1SS01	2301-001157	C-FILM,LEAD-PEF;47nF,10%,275VBK,17.5x12	⚠
C1SS02	2301-001157	C-FILM,LEAD-PEF;47nF,10%,275VBK,17.5x12	⚠
C1SS03	2201-002044	C-CERAMIC,DISC;0.1NF,10%,400V,Y5P,TP,8.5	⚠
C1SS05	2201-002044	C-CERAMIC,DISC;0.1NF,10%,400V,Y5P,TP,8.5	⚠
C1SS06	2201-002044	C-CERAMIC,DISC;0.1NF,10%,400V,Y5P,TP,8.5	⚠
C1SS10	2401-003303	C-AL;82uF,20%,400V,GP,BK,22X30,10	
C1SS11	2401-000598	C-AL;1uF,20%,50V,GP,TP,4x7,5	
C1SS12	2401-002299	C-AL;4.7uF,20%,50V,GP,TP,5x7,5	
C1SS15	2401-001992	C-AL;2200UF,20%,10V,WT,TP,10X20MM,5	
C1SS16	2401-003480	C-AL;1000UF,20%,10V,LZ,TP,10X16MM,5	
C1SS17	2401-001992	C-AL;2200UF,20%,10V,WT,TP,10X20MM,5	
C1SS18	2401-001992	C-AL;2200UF,20%,10V,WT,TP,10X20MM,5	
C1SS19	2401-000385	C-AL;10uF,20%,100V,GP,TP,6.3x11,5	
C1SS21	2401-001126	C-AL;330uF,20%,25V,WT,TP,10x12.5,5	
C1SS22	2401-001126	C-AL;330uF,20%,25V,WT,TP,10x12.5,5	
C1SS26	2401-001126	C-AL;330uF,20%,25V,WT,TP,10x12.5,5	
C1SS27	2301-000129	C-FILM,LEAD-PEF;100nF,5%,50V,TP,10X9X4.3	
CN01	3711-005565	CONNECTOR-HEADER;NOWALL,24P,1R,2mm,STRAI	
CN1SS1	3711-000178	CONNECTOR-HEADER;1WALL,2P,1R,3.96mm,STRA	
D1SF01	0401-000101	DIODE-SWITCHING;1N4148,75V,150MA,DO-35,T	
D1SF02	0402-001195	DIODE-RECTIFIER;FIT4,400V,1A,DO-204AC,TP	
D1SS01	0402-001196	DIODE-RECTIFIER;ITS,600V,1A,TS-1,TP	
D1SS02	0402-001196	DIODE-RECTIFIER;ITS,600V,1A,TS-1,TP	
D1SS03	0402-001196	DIODE-RECTIFIER;ITS,600V,1A,TS-1,TP	
D1SS04	0402-001196	DIODE-RECTIFIER;ITS,600V,1A,TS-1,TP	
D1SS11	0402-000012	DIODE-RECTIFIER;UF4007,1KV,1A,DO-41,TP	
D1SS12	0404-001225	DIODE-SCHOTTKY;SRAF560,60V,5000mA,ITO-22	
D1SS13	0404-001225	DIODE-SCHOTTKY;SRAF560,60V,5000mA,ITO-22	
D1SS14	0404-001225	DIODE-SCHOTTKY;SRAF560,60V,5000mA,ITO-22	
D1SS15	0402-001195	DIODE-RECTIFIER;FIT4,400V,1A,DO-204AC,TP	
D1SS16	0402-001194	DIODE-RECTIFIER;UG2D,200V,2A-,TP	
D1SS19	0402-001195	DIODE-RECTIFIER;FIT4,400V,1A,DO-204AC,TP	
F1SS01	3601-001123	FUSE-CARTRIDGE;250V,1.6A,TIME-LAG,CERAMI	⚠
FZ01	3601-001240	FUSE-RADIAL LEAD;50V,1A-,-,5.0x4.0x5.0m	
FZ02	3601-001240	FUSE-RADIAL LEAD;50V,1A-,-,5.0x4.0x5.0m	
IC1S02	0604-001028	PHOTO-COUPLER,TR,50-600%,250mW,DIP-4,ST	⚠
IC1S03	AC14-12006D	IC;KA431Z,TO-92,TAPING	
IC1S52	1203-002805	IC-PWM CONTROLLER;ICE2BS01,PDIP,8P,9.52X	
L1SS01	AC29-00002A	FILTER LINE NOISE;-,30mH,-,-,BU-Z116	
L1SS02	AC29-00003A	FILTER LINE NOISE;-,20mH MIN,-,-,	⚠
L1SS03	AC27-12001N	COIL CHOKE;10UH-15%,RA,K-30,080,150KHZ,-	
L1SS04	AC27-12001N	COIL CHOKE;10UH-15%,RA,K-30,080,150KHZ,-	
L1SS05	AC27-12001N	COIL CHOKE;10UH-15%,RA,K-30,080,150KHZ,-	
PT1SD1	AC26-00012J	TRANS SWITCHING;EER-3126,SLV-D950E,-,-,	⚠
R1SD11	2006-000273	R-CEMENT;27KOHM,5%,2W,CA,BK,6.4X6.5X18M	
R1SD13	2006-000273	R-CEMENT;27KOHM,5%,2W,CA,BK,6.4X6.5X18M	
R1SD14	2001-000596	R-CARBON;3.3OHM,5%,1/8W,AA,TP,1.8X3.2MM	
R1SF05	2001-000527	R-CARBON;220HM,5%,1/8W,AA,TP,1.8X3.2MM	
R1SF06	2004-000459	R-METAL;2.2Kohm,1%,1/8W,AA,TP,1.8x3.2m	
R1SF07	2003-000105	R-METAL OXIDE;0.33ohm,5%,2W,AD,TP,6x16mm	
R1SG11	2001-000281	R-CARBON;1000HM,5%,1/8W,AA,TP,1.8X3.2MM	
R1SR01	2001-000548	R-CARBON;270KOHM,5%,1/8W,AA,TP,1.8X3.2M	
R1SR02	2001-000548	R-CARBON;270KOHM,5%,1/8W,AA,TP,1.8X3.2M	
R1SR03	2001-000548	R-CARBON;270KOHM,5%,1/8W,AA,TP,1.8X3.2M	
R1SS01	2006-000262	R-CEMENT;2.7ohm,10%,2W,CB,TP,7.5x11x20	
R1SS06	2007-000793	R-CHIP;470HM,5%,1/8W,AA,TP,1.8X3.2MM	
R1SS31	2001-000780	R-CARBON;470OHM,5%,1/8W,AA,TP,1.8X3.2MM	
R1SS32	2001-000429	R-CARBON;1KOHM,5%,1/8W,AA,TP,1.8X3.2MM	
R1SS33	2001-000429	R-CARBON;1KOHM,5%,1/8W,AA,TP,1.8X3.2MM	
R1SS34	2004-000895	R-METAL;3Kohm,1%,1/8W,AA,TP,1.8x3.2mm	
R1SS35	2004-000459	R-METAL;2.2Kohm,1%,1/8W,AA,TP,1.8x3.2m	
ZD1SS1	0403-000713	DIODE-ZENER;MTZJ20B,18.63-17.7V,500MW,DO	
ZD1SS2	0403-001318	DIODE-ZENER,MTZJ4.3B,4.17-4.43V,500MW,DO	
POWER DRIVER PARTS			
C1P101	2401-003480	C-AL;1000UF,20%,10V,LZ,TP,10X16MM,5	
C1P102	2401-003336	C-AL;4.7UF,20%,50V,GP,TP,5X5,2	
C1P103	2401-002026	C-AL;10UF,20%,35V,GP,TP,5X5,2.5	
C1P104	2401-000588	C-AL;1uF,20%,50V,GP,TP,3x5,2.5	
C1P105	2401-003336	C-AL;4.7UF,20%,50V,GP,TP,5X5,2	
C1P106	2401-000463	C-AL;10UF,20%,35V,GP-,5X5,5	
C1P107	2401-002299	C-AL;4.7uF,20%,50V,GP,TP,5x7,5	
C1P109	2401-000414	C-AL;10uF,20%,16V,GP,TP,4x7,5	
C1P110	2401-000414	C-AL;10uF,20%,16V,GP,TP,4x7,5	
C1P111	2401-000463	C-AL;10UF,20%,35V,GP-,5X5,5	
C1P112	2401-002299	C-AL;4.7uF,20%,50V,GP,TP,5x7,5	
C1P113	2401-000596	C-AL;1uF,20%,50V,GP,TP,4x7,5	
C1P114	2401-002165	C-AL;100uF,20%,16V,GP,TP,6.3x7,5	
C1P115	2401-002165	C-AL;100uF,20%,16V,GP,TP,6.3x7,5	
C1P116	2401-002299	C-AL;4.7uF,20%,50V,GP,TP,5x7,5	
D1P104	0401-000101	DIODE-SWITCHING;1N4148,75V,150MA,DO-35,T	
D1P105	0401-000101	DIODE-SWITCHING;1N4148,75V,150MA,DO-35,T	
D1P106	0401-000101	DIODE-SWITCHING;1N4148,75V,150MA,DO-35,T	
D1P107	0401-000101	DIODE-SWITCHING;1N4148,75V,150MA,DO-35,T	
D1P108	0401-000101	DIODE-SWITCHING;1N4148,75V,150MA,DO-35,T	
D1P130	0402-000127	DIODE-RECTIFIER;1N4002,100V,1A,DO-41,TP	
L1P102	AC27-12001N	COIL CHOKE;10UH-15%,RA,K-30,080,150KHZ,-	
Q1P101	0501-000362	TR-SMALL SIGNAL;KSC2328A-Y,NPN,1000mW,TO	
Q1P102	0504-000142	TR-DIGITAL;KSR2001,PNP,300mW,4.7K/4.7K,T	
Q1P103	0501-000398	TR-SMALL SIGNAL;KSC945,NPN,250mW,TO-92,T	
Q1P104	0501-000362	TR-SMALL SIGNAL;KSC2328A-Y,NPN,1000mW,TO	
Q1P105	0501-000362	TR-SMALL SIGNAL;KSC2328A-Y,NPN,1000mW,TO	
Q1P106	0501-000362	TR-SMALL SIGNAL;KSC2328A-Y,NPN,1000mW,TO	
Q1P107	0501-000362	TR-SMALL SIGNAL;KSC2328A-Y,NPN,1000mW,TO	
Q1P108	0504-000142	TR-DIGITAL;KSR2001,PNP,300mW,4.7K/4.7K,T	
Q1P109	0501-000398	TR-SMALL SIGNAL;KSC945,NPN,250mW,TO-92,T	
Q1P110	0501-000362	TR-SMALL SIGNAL;KSC2328A-Y,NPN,1000mW,TO	
Q1P111	0501-000362	TR-SMALL SIGNAL;KSC2328A-Y,NPN,1000mW,TO	
R1P101	2001-000855	R-CARBON;560OHM,5%,1/4W,AA,TP,2.4X6.4MM	⚠
R1P103	2007-000402	R-CHIP,150ohm,5%,1/10W,TP,1608	
R1P104	2001-000449	R-CARBON;2.2KOHM,5%,1/8W,AA,TP,1.8X3.2M	
R1P105	2001-000969	R-CARBON;750HM,5%,1/8W,AA,TP,1.8X3.2MM	⚠
R1P109	2001-000362	R-CARBON;150OHM,5%,1/8W,AA,TP,1.8X3.2MM	
R1P110	2001-000449	R-CARBON;2.2KOHM,5%,1/8W,AA,TP,1.8X3.2M	
R1P111	2001-000062	R-CARBON;470OHM,5%,1/4W,AA,TP,2.4X6.4MM	
R1P112	2001-000302	R-CARBON;100HM,5%,1/8W,AA,TP,1.8X3.2MM	
R1P122	2007-000134	R-CHIP,33Kohm,5%,1/10W,TP,1608	
ZD1P02	0403-001211	DIODE-ZENER;MTZJ12B,11.8-12.3V,500MW,DO-	
ZD1P03	0403-000720	DIODE-ZENER;MTZJ9.1B,8.57-9.01V,500MW,DO	
ZD1P04	0403-000717	DIODE-ZENER;MTZJ5.1B,4.94-5.2V,500MW,DO-	
ZD1P05	0403-001211	DIODE-ZENER;MTZJ12B,11.8-12.3V,500MW,DO-	
ZD1P06	0403-000717	DIODE-ZENER,MTZJ5.1B,4.94-5.2V,500MW,DO-	
SYSTEM CONTROL/SERVO PARTS			
C601	2203-002398	C-CER,CHIP;22nF,10%,50V,X7R,TP,1608	
C602	2401-002095	C-AL;47uF,20%,25V,GP,TP,6.3x5,5	
C605	2203-000257	C-CER,CHIP;10nF,10%,50V,X7R,TP,1608	
C606	2203-000257	C-CER,CHIP;10nF,10%,50V,X7R,TP,1608	
C607	2401-000118	C-AL;1000uF,20%,10V,GP,TP,10x12.5,5	
C607A	2401-003107	C-AL;47uF,20%,16V,GP,TP,5x7,5	
C608	2401-002259	C-AL;0.1F,+80-20%,5.5V,-,TP,1	BACK-UP 1HOUR Only
C610	2202-002037	C-CERAMIC,MLC-AXIAL;100nF,80-20%,50V,Y5V	

C618	2401-000369	C-AL:100uF;20%,50V,GP,TP,8x11.5,5	
C618A	2401-002095	C-AL,47uF,20%,25V,GP,TP,5 3x5,5	
C619	2202-000257	C-CER,CHIP;10nF,10%,50V,X7R,TP,1608	
C620	2401-001543	C-AL:47uF,20%,,25V,GP,TP,6.3x5mm,2.5	
C621	2203-000257	C-CER,CHIP;10nF,10%,50V,X7R,TP,1608	
C623	2203-000257	C-CER,CHIP;10nF,10%,50V,X7R,TP,1608	
C624	2203-000626	C-CER,CHIP,0.022nF,5%,50V,C0G	BACK-UP 1HOUR Only
C625	2203-000626	C-CER,CHIP;0.022nF,5%,50V,C0G	BACK-UP 1HOUR Only
C626	2203-000626	C-CER,CHIP;0.022nF,5%,,50V,C0G,TP,1608	
C627	2203-000626	C-CER,CHIP;0.022nF,5%,,50V,C0G,TP,1608	
C628	2203-000661	C-CER,CHIP;0.027NF,5%,,50V,C0G,TP,1608	
C633	2203-000257	C-CER,CHIP;10nF,10%,,50V,X7R,TP,1608	
C635	2203-000491	C-CER,CHIP;2.2nF,10%,,50V,X7R,TP,1608,-	
C636	2203-000491	C-CER,CHIP;2.2nF,10%,,50V,X7R,TP,1608,-	
C637	2203-001656	C-CER,CHIP;0.47nF,5%,,50V,NP0,TP,1608	
C638	2401-002196	C-AL,4.7UF,20,25V,GP,TP,4X5,5MM,-	
C639	2203-000236	C-CER,CHIP;0.1NF,5%,,50V,C0G,TP,1608	
C640	2203-005148	C-CER,CHIP;100nF,10%,,16V,X7R,TP,1608	
C641	2401-003221	C-AL,100uF,20%,,16V,GP,TP,8X5,2.5	
C642	2401-002095	C-AL;47uF,20%,,25V,GP,TP,5 3x5,5	
C645	2203-000257	C-CER,CHIP;0.15NF,5%,,50V,C0G,TP,1608	
C646	2203-005148	C-CER,CHIP;100nF,10%,,16V,X7R,TP,1608	
C658A	2203-001140	C-CER,CHIP;68nF,10%,,16V,X7R,TP,1608	
C661	2202-002055	C-CERAMIC,MLC-AXIAL;47nF,+80-20%,,50V,Y5V	
C688	2401-003107	C-AL,47uF,20%,,16V,GP,TP,5x7,5	
C691	2203-000257	C-CER,CHIP;10nF,10%,,50V,X7R,TP,1608	
C695	2203-000357	C-CER,CHIP;0.15NF,5%,,50V,C0G,TP,1608	
C696	2203-000236	C-CER,CHIP;0.1NF,5%,,50V,C0G,TP,1608	
CN604	AC37-00027A	CONNECTOR-HEADER;2004SWS,X-11,T,P,5,W17.4	
D603	0401-000101	DIODE-SWITCHING;1N4148,75V,150MA,DO-35,T	
D620	0402-000127	DIODE-RECTIFIER;1N4002,100V,1A,DO-41,TP	
D668	0401-000101	DIODE-SWITCHING;1N4148,75V,150MA,DO-35,T	
D692	0402-000127	DIODE-RECTIFIER;1N4002,100V,1A,DO-41,TP	
IC501	AC39-00506A	IC MICOM;N128-B64-3BA,SV-DVD440-02,100P	
IC604	AC14-12006C	IC,KA7533,DIP,-	
IC605	1103-001150	IC-EEPROM;24C08,1Kx8,DIP8P9.2x6.4mm,2	
IC608	1203-000515	IC-VOL. DETECTOR;7042,TO-92,3	BACK-UP 1HOUR Only
L603	2701-000002	INDUCTOR-AXIAL;100UH,10%,4298	
L605	2701-000002	INDUCTOR-AXIAL;100UH,10%,4298	
LD601	3601-001917	LED-IR,SIDE-VIEW,2.5mm,75mW,6V,940,TR	
PT601	3604-001275	PHOTO-INTERRUPTER;-,-,-,SNAP,TR	
PT602	3604-001275	PHOTO-INTERRUPTER;-,-,-,SNAP,TR	
Q601	3504-000129	TR-DIGITAL;KSR1104,NPN,200mW,47K/47K,SOT	
R628	2001-000864	R-CARBON;56KOHM,5%,1/8W,AA,TP,1.8X3.2MM	
R629	2001-000864	R-CARBON;56KOHM,5%,1/8W,AA,TP,1.8X3.2MM	
R610	2001-000281	R-CARBON;1000HM,5%,1/8W,AA,TP,1.8X3.2MM	
R611	2001-000281	R-CARBON;1000HM,5%,1/8W,AA,TP,1.8X3.2MM	
R613	2007-000078	R-CHIP;1Kohm,5%,1/10W,TP,1608	BACK-UP 1HOUR Only
R614	2001-000429	R-CARBON;1KOHM,5%,1/8W,AA,TP,1.8X3.2MM	
R615	2001-000429	R-CARBON;1KOHM,5%,1/8W,AA,TP,1.8X3.2MM	
R617	2001-000864	R-CARBON;56KOHM,5%,1/8W,AA,TP,1.8X3.2MM	
R620	2007-000090	R-CHIP;10Kohm,5%,1/10W,TP,1608	
R622	2007-000090	R-CHIP;10Kohm,5%,1/10W,TP,1608	
R630	2007-000090	R-CHIP;10Kohm,5%,1/10W,TP,1608	
R631	2007-000078	R-CHIP;1Kohm,5%,1/10W,TP,1608	
R632	2001-000429	R-CARBON;1KOHM,5%,1/8W,AA,TP,1.8X3.2MM	
R633	2001-000429	R-CARBON;1KOHM,5%,1/8W,AA,TP,1.8X3.2MM	
R634	2007-000094	R-CHIP;4.7Kohm,5%,1/10W,TP,1608	
R635	2007-000094	R-CHIP;4.7Kohm,5%,1/10W,TP,1608	
R636	2001-000281	R-CARBON;1000HM,5%,1/8W,AA,TP,1.8X3.2MM	
R640	2007-000090	R-CHIP;10Kohm,5%,1/10W,TP,1608	
R641	2001-000780	R-CARBON;470OHM,5%,1/8W,AA,TP,1.8X3.2MM	
R642	2001-000780	R-CARBON;470OHM,5%,1/8W,AA,TP,1.8X3.2MM	
R644	2007-000078	R-CHIP;1Kohm,5%,1/10W,TP,1608	
R647	2001-000429	R-CARBON;1KOHM,5%,1/8W,AA,TP,1.8X3.2MM	
R651	2001-000010	R-CARBON;68KOHM,5%,1/8W,AA,TP,1.8X3.2MM	

R652	2001-000568	R-CARBON;27OHM,5%,1/8W,AA,TP,	BACK-UP 1HOUR Only
R657	2007-000070	R-CHIP;0ohm,5%,1/10W,TP,1608	
	2007-000100	R-CHIP;68Kohm,5%,1/10W,TP,160	BACK-UP 1HOUR Only
R660	2001-000786	R-CARBON;47KOHM,5%,1/8W,AA,TP,1.8X3.2MM	
R661	2001-000660	R-CARBON;23KOHM,5%,1/8W,AA,TP,1.8X3.2MM	
R666	2007-000094	R-CHIP;4.7Kohm,5%,1/10W,TP,1608	
R667	2007-000094	R-CHIP;4.7Kohm,5%,1/10W,TP,1608	
R668	2001-000780	R-CARBON;470OHM,5%,1/8W,AA,TP,1.8X3.2MM	
R669	2001-000780	R-CARBON;470OHM,5%,1/8W,AA,TP,1.8X3.2MM	
R670	2001-000734	R-CARBON;4.7KOHM,5%,1/8W,AA,TP,1.8X3.2M	
R671	2001-000734	R-CARBON;4.7KOHM,5%,1/8W,AA,TP,1.8X3.1M	
R672	2001-000734	R-CARBON;4.7KOHM,5%,1/8W,AA,TP,1.8X3.2M	
R673	2001-000429	R-CARBON;1KOHM,5%,1/8W,AA,TP,1.8X3.2MM	
R674	2007-000080	R-CHIP;10Kohm,5%,1/10W,TP,1608	
R675	2001-000022	R-CARBON;180OHM,5%,1/4W,AA,TP,2.4X6.4MM	
R676	2001-000633	R-CARBON;30KOHM,5%,1/8W,AA,TP,1.8X3.2MM	
R678	2007-000094	R-CHIP;22Kohm,5%,1/10W,TP,1608	
R679	2007-000075	R-CHIP;220ohm,5%,1/10W,TP,1608	
R692	2007-000094	R-CHIP;22Kohm,5%,1/10W,TP,1608	
R685	2001-000812	R-CARBON;5.6KOHM,5%,1/8W,AA,TP,1.8X3.2M	
R688	2007-000655	R-CHIP;27Kohm,5%,1/10W,TP,1608	
R691	2007-000075	R-CHIP;220ohm,5%,1/10W,TP,1608	
R693	2007-000097	R-CHIP;47Kohm,5%,1/10W,TP,1608	
R694	2007-000097	R-CHIP;47Kohm,5%,1/10W,TP,1608	
R698	2001-000290	R-CARBON;10KOHM,5%,1/8W,AA,TP,1.8X3.2MM	
S602	0603-001134	PHOTO TR;-,30V,4V,50mA,75mW,TRAY	
SW601	AC34-00005A	SWITCH MODE;-,-,-,-,-,-,-,-,-,-,-,-,-,-,-,-,-	
SW602	AC34-00006A	SWITCH-REC;-,-,-,-,-,-,-,-,-,-,-,-,-,-,-,-,-	
W668	2007-000070	R-CHIP;0ohm,5%,1/10W,TP,1608	Not used SECAM
X1501	2801-003318	CRYSTAL-UNIT;32.768KHz,20ppm,	BACK-UP 1HOUR Only
X1502	2801-003139	CRYSTAL-UNIT;8MHz,50ppm,28-AAA,22pF,50oh	

AUDIO/VIDEO PARTS

C315	2203-000975	C-CER,CHIP;47nF,10%,,25V,X7R,TP,1608,-	
C317	2401-000588	C-AL;1uF,20%,,50V,GP,TP,3x5,2.5	
C318	2401-000588	C-AL;1uF,20%,,50V,GP,TP,3x5,2.5	
C319	2203-000843	C-CER,CHIP;39nF,10%,,25V,X7R,TP,1608,-	
C320	2203-000975	C-CER,CHIP;47nF,10%,,25V,X7R,TP,1608,-	
C321	2203-002398	C-CER,CHIP;22nF,10%,,50V,X7R,TP,1608	
C322	2401-000588	C-AL;1uF,20%,,50V,GP,TP,3x5,2.5	
C324	2203-000257	C-CER,CHIP;10nF,10%,,50V,X7R,TP,1608	
C325	2401-001502	C-AL,47uF,20%,,16V,GP,TP,5 3x5,2.5	
C326	2401-000588	C-AL;1uF,20%,,50V,GP,TP,3x5,2.5	
C327	2203-001211	C-CER,CHIP;8.2nF,10%,,50V,X7R,TP,1608,-	
C328	2203-000257	C-CER,CHIP;10nF,10%,,50V,X7R,TP,1608	
C329	2203-005148	C-CER,CHIP;100nF,10%,,16V,X7R,TP,1608	
C330	2203-000975	C-CER,CHIP;47nF,10%,,25V,X7R,TP,1608,-	
C331	2203-005148	C-CER,CHIP;100nF,10%,,16V,X7R,TP,1608	
	2007-000070	R-CHIP;0ohm,5%,,1/10W,TP,1608	Not used SECAM
C332	2203-000975	C-CER,CHIP;47nF,10%,,25V,X7R,TP,1608,-	
C333	2401-000408	C-AL;10uF,20%,,16V,GP,TP,3 5x5,2.5	
C334	2203-000975	C-CER,CHIP;47nF,10%,,25V,X7R,TP,1608,-	
C334A	2203-000236	C-CER,CHIP;0.1NF,5%,,50V,C0G,TP,1608	
C335	2203-001652	C-CER,CHIP;470nF,+80-20%,,16V,Y5V,TP,1608	
C336	2203-000975	C-CER,CHIP;47nF,10%,,25V,X7R,TP,1608,-	
C337	2203-001652	C-CER,CHIP;470nF,+80-20%,,16V,Y5V,TP,1608	
C338	2203-000609	C-CER,CHIP;22nF,10%,,50V,X7R,TP,2012	
C339	2401-000408	C-AL;10uF,20%,,16V,GP,TP,3 5x5,2.5	
C340	2401-001226	C-AL;4.7uF,20%,,16V,GP,TP,4x7,5mm	
C341	2401-003107	C-AL,47uF,20%,,16V,GP,TP,5x7,5	
C342	2202-002037	C-CERAMIC,MLC-AXIAL;100nF,80-20%,,50V,Y5V	
C343	2203-005065	C-CER,CHIP;1000nF,+80-20%,,10V,Y5V,-,1608	
C344	2203-000315	C-CER,CHIP;0.12NF,5%,,50V,C0G,TP,1608	
C345	2203-001607	C-CER,CHIP;0.22nF,5%,,50V,NP0,-,1608	
C347	2203-005065	C-CER,CHIP;1000nF,+80-20%,,10V,Y5V,-,1608	
C348	2203-005148	C-CER,CHIP;100nF,10%,,16V,X7R,TP,1608	

C349	2203-005065	C-CER,CHIP;1000nF,+80-20%,,10V,Y5V,-,1608	
C350	2203-005148	C-CER,CHIP;100nF,10%,,16V,X7R,TP,1608	
C351	2401-003107	C-AL,47uF,20%,,16V,GP,TP,5x7,5	
C352	2401-000588	C-AL;1uF,20%,,50V,GP,TP,3x5,2.5	
C353	2401-000588	C-AL;1uF,20%,,50V,GP,TP,3x5,2.5	
C354	2401-001502	C-AL,47uF,20%,,16V,GP,TP,5 3x5,2.5	
C355	2203-000975	C-CER,CHIP;47nF,10%,,25V,X7R,TP,1608,-	
C355A	2203-000236	C-CER,CHIP;0.1NF,5%,,50V,C0G,TP,1608	
C380	2203-002398	C-CER,CHIP;22nF,10%,,50V,X7R,TP,1608	
C384	2203-005148	C-CER,CHIP;100nF,10%,,16V,X7R,TP,1608	
C385	2401-002165	C-AL;100uF,20%,,16V,GP,TP,6.3x7,5	
C392	2203-000257	C-CER,CHIP;10nF,10%,,50V,X7R,TP,1608	
C3A01	2401-002299	C-AL,4.7uF,20%,,50V,GP,TP,5x7,5	
C3A02	2401-000922	C-AL,22uF,20%,,16V,GP,TP,5x5,5	
C3A08	2203-000257	C-CER,CHIP;10nF,10%,,50V,X7R,TP,1608	
C3A09	2203-001103	C-CER,CHIP;6.8nF,10%,,50V,X7R,TP,1608,-	
C3A10	2203-001211	C-CER,CHIP;8.2nF,10%,,50V,X7R,TP,1608,-	
C3A11	2301-001680	C-FILM,PEF;15nF,5%,,50V,TP,6.3x3x7mm,-	
C3A12	2401-002095	C-AL,47uF,20%,,25V,GP,TP,5 3x5,5	
C3A14	2202-000263	C-CERAMIC,MLC-AXIAL;470pF,10%,,50V,Y5P,TP	
C3A15	2203-000257	C-CER,CHIP;10nF,10%,,50V,X7R,TP,1608	
C3A16	2401-002299	C-AL,4.7uF,20%,,50V,GP,TP,5x7,5	
C3A17	2401-000414	C-AL;10uF,20%,,16V,GP,TP,4x7,5	
C3A18	2203-001126	C-CER,CHIP;0.68nF,10%,,50V,X7R,TP,1608	
C3A21A	2203-001554	C-CER,CHIP;1.8nF,10%,,50V,X7R,TP,1608	
C3A23	2401-002069	C-AL,33uF,20%,,16V,GP,TP,6.3x6,5	
C3A24	2203-005148	C-CER,CHIP;100nF,10%,,16V,X7R,TP,1608	
C3A29	2203-005148	C-CER,CHIP;100nF,10%,,16V,X7R,TP,1608	
C3A30	2401-001502	C-AL,47uF,20%,,16V,GP,TP,5 3x5,2.5	
C3A40	2401-000414	C-AL;10uF,20%,,16V,GP,TP,4x7,5	
C3A41	2401-000588	C-AL;1uF,20%,,50V,GP,TP,3x5,2.5	
C3A70	2203-001126	C-CER,CHIP;0.68nF,10%,,50V,X7R,TP,1608	
C3A71	2007-000070	R-CHIP;0ohm,5%,,1/10W,TP,1608	
CN301	3708-000391	CONNECTOR-FPC/FFC/PIC;10P,1.25MM,STRAIGH	
CN3A01	3708-001165	CONNECTOR-FPC/FFC/PIC;9P,1.25MM,STRAIGHT	
CN3A02	AC37-00028A	CONNECTOR-SOCKET;-,X-11,T,9.0,WB,5,PBT NT	
CN3A1S	3809-001206	CABLE-FLAT;30V,-20to+80C,140mm,6P,1.25mm	
D301	0401-000101	DIODE-SWITCHING;1N4148,75V,150MA,DO-35,T	
D302	0402-000127	DIODE-RECTIFIER;1N4002,100V,1A,DO-41,TP	
D303	0401-000101	DIODE-SWITCHING;1N4148,75V,150MA,DO-35,T	
FL3A01	2702-000166	INDUCTOR-RADIAL;47uH,5%,6.0x6.4mm	
IC301	1204-002140	IC-VIDEO PROCESS;LA71750EM-MPB-E,QFP,100	
L301	2701-000002	INDUCTOR-AXIAL;100UH,10%,4298	
L301A	2701-000002	INDUCTOR-AXIAL;100UH,10%,4298	
L302	2701-000002	INDUCTOR-AXIAL;100UH,10%,4298	
L303	2701-000002	INDUCTOR-AXIAL;100UH,10%,4298	
L304	3301-000297	BEAD-AXIAL;25ohm,3.6x1.2x5.7mm,,TP,,	
L370	2701-000113	INDUCTOR-AXIAL;100UH,5%,,2534	
L3A01	2702-000120	INDUCTOR-RADIAL;15000uH,5%,6.2x7.4mm	
L3A02	2701-000002	INDUCTOR-AXIAL;100UH,10%,4298	
L3A03	2701-000002	INDUCTOR-AXIAL;100UH,10%,4298	
L3A70	2702-000120	INDUCTOR-RADIAL;15000uH,5%,6.2x7.4mm	
Q302	0501-000341	TR-SMALL SIGNAL;KSC1623-L,NPN,200mW,SOT-	SECAM Only
Q351	0501-000002	TR-SMALL SIGNAL;KSA812,PNP,150MW,SOT-23,	
Q3A01	0501-000398	TR-SMALL SIGNAL;KSC945,NPN,250mW,TO-92,T	
Q3A02	0501-000303	TR-SMALL SIGNAL;KSA733,PNP,250mW,TO-92,T	
Q3A03	0501-000442	TR-SMALL SIGNAL;KTC3203-Y,NPN,400mW,TO-9	
Q3A04	0501-000442	TR-SMALL SIGNAL;KTC3203-Y,NPN,400mW,TO-9	
Q3A05	0501-000442	TR-SMALL SIGNAL;KTC3203-Y,NPN,400mW,TO-9	
Q3A06	0501-000303	TR-SMALL SIGNAL;KSA733,PNP,250mW,TO-92,T	
R315	2007-000122	R-CHIP;1.2Kohm,5%,1/10W,TP,1608	
R316	2007-001179	R-CHIP;8.2Kohm,5%,1/16W,TP,1608	
R320	2007-000458	R-CHIP;18Kohm,5%,1/10W,TP,1608	
R321	2007-000090	R-CHIP;10Kohm,5%,1/10W,TP,1608	
R322	2007-000458	R-CHIP;18Kohm,5%,1/10W,TP,1608	
R323	2007-000125	R-CHIP;3.9Kohm,5%,1/10W,TP,1608	

R324	2007-000079	R-CHIP;1.8Kohm,5%,1/10W,TP,1608	SECAM Only
R325	2001-000281	R-CARBON;1000HM,5%,1/8W,AA,TP,1.8X3.2MM	
R326	2001-000281	R-CARBON;1000HM,5%,1/8W,AA,TP,1.8X3.2MM	
R327	2007-000084	R-CHIP;4.7Kohm,5%,1/10W,TP,1608	
R328	2007-000122	R-CHIP;1.2Kohm,5%,1/10W,TP,1608	
R329	2007-000081	R-CHIP;2.7Kohm,5%,1/10W,TP,1608	
R330	2007-000087	R-CHIP;5.6Kohm,5%,1/10W,TP,1608	
R331	2007-000079	R-CHIP;1.8Kohm,5%,,1/10W,TP,1608	
R333	2007-001039	R-CHIP;56Kohm,5%,,1/8W,TP,2012	
R334	2007-000123	R-CHIP;1.5Kohm,5%,1/10W,TP,1608	
R335	2001-000281	R-CARBON;1000HM,5%,1/8W,AA,TP,1.8X3.2MM	
R350	2007-000123	R-CHIP;1.5Kohm,5%,1/10W,TP,1608	SECAM Only
R360	2007-001196	R-CHIP;820Kohm,5%,1/10W,TP,1608	
R371	2007-000119	R-CHIP;560ohm,5%,1/10W,TP,1608	
R372	2007-000078	R-CHIP;1Kohm,5%,1/10W,TP,1608	
R373	2007-000093	R-CHIP;20Kohm,5%,1/10W,TP,1608	
R380	2007-000124	R-CHIP;2.2Kohm,5%,1/10W,TP,1608	
R3A01	2007-000090	R-CHIP;10Kohm,5%,1/10W,TP,1608	
R3A04	2001-000221	R-CARBON;1.2KOHM,5%,1/8W,AA,TP,1.8X3.2M	
R3A05	2007-000616	R-CHIP;24Kohm,5%,1/10W,TP,1608	
R3A06	2007-000539	R-CHIP;200ohm,5%,1/10W,TP,1608	
R3A07	2007-000133	R-CHIP;330Kohm,5%,1/10W,TP,1608	
R3A08	2007-000091	R-CHIP;12Kohm,5%,1/10W,TP,1608	
R3A09	2007-000070	R-CHIP;0ohm,5%,,1/10W,TP,1608	
R3A11	2007-000124	R-CHIP;2.2Kohm,5%,1/10W,TP,1608	
R3A12	2007-000074	R-CHIP;100ohm,5%,1/10W,TP,1608	
R3A13	2007-000097	R-CHIP;47Kohm,5%,1/10W,TP,1608	
R3A14	2007-000094	R-CHIP;22Kohm,5%,1/10W,TP,1608	
R3A16	2007-000090	R-CHIP;10Kohm,5%,1/10W,TP,1608	
R3A17	2007-000124	R-CHIP;2.2Kohm,5%,1/10W,TP,1608	
R3A18	2007-000124	R-CHIP;2.2Kohm,5%,1/10W,TP,1608	
R3A23	2007-000091	R-CHIP;12Kohm,5%,1/10W,TP,1608	
R3A24	2007-000094	R-CHIP;22Kohm,5%,1/10W,TP,1608	
R3A25	2001-000221	R-CARBON;1.2KOHM,5%,1/8W,AA,TP,1.8X3.2M	
R3A26	2007-000090	R-CHIP;10Kohm,5%,1/10W,TP,1608	
R3A28	2007-000124	R-CHIP;2.2Kohm,5%,1/10W,TP,1608	
R3A50	2001-000800	R-CARBON;5.1KOHM,5%,1/8W,AA,TP,1.8X3.2M	
R3A51	2007-000090	R-CHIP;10Kohm,5%,1/10W,TP,1608	
R3A60	2007-000704	R-CHIP;3.6Kohm,5%,1/10W,TP,1608	
R3A70	2007-000084	R-CHIP;4.7Kohm,5%,1/10W,TP,1608	
W177	2001-000429	R-CARBON;1KOHM,5%,1/8W,AA,TP,1.8X3.2MM	
W178	2001-000429	R-CARBON;1KOHM,5%,1/8W,AA,TP,1.8X3.2MM	
W205	2001-000281	R-CARBON;1000HM,5%,1/8W,AA,TP,1.8X3.2MM	
W206	2001-000281	R-CARBON;1000HM,5%,1/8W,AA,TP,1.8X3.2MM	
W311	2701-000002	INDUCTOR-AXIAL;100UH,10%,4298	
XT301	2801-001397	CRYSTAL-UNIT;4.433619MHz,20ppm,28-AAA,S,	

TM-BLOCK PARTS

C401	2401-003107	C-AL,47uF,20%,,16V,GP,TP,5x7,5	
C402	2203-002398	C-CER,CHIP;22nF,10%,,50V,X7R,TP,1608	
C403	2401-001502	C-AL,47uF,20%,,16V,GP,TP,5 3x5,2.5	
C404	2401-001077	C-AL;330nF,20%,,50V,GP,TP,4x7mm,5mm	
C405	2401-002438	C-AL,47uF,20%,,50V,WT,TP,5 3x11,5	
C406	2203-000257	C-CER,CHIP;10nF,10%,,50V,X7R,TP,1608	
C407	2401-003107	C-AL,47uF,20%,,16V,GP,TP,5x7,5	Not used SECAM
C409	2401-002299	C-AL,4.7uF,20%,,50V,GP,TP,5x7,	Not used SECAM
C410	2203-000257	C-CER,CHIP;10nF,10%,,50V,X7R,TP,1608	
D401	0402-000127	DIODE-RECTIFIER;1N4002,100V,1A,DO-41,TP	
L401	AC27-12001N	COIL CHOKE;10UH-15%,RA,K-30,080,150KHZ,-	
Q401	0501-000002	TR-SMALL SIGNAL;KSA812,PNP,15	Not used SECAM
R401	2001-000786	R-CARBON;47KOHM,5%,1/8W,AA,TP	Not used SECAM
R402	2001-000281	R-CARBON;1000HM,5%,1/8W,AA,TP	Not used SECAM
R403	2001-000281	R-CARBON;1000HM,5%,1/8W,AA,TP,1.8X3.2MM	
R404	2001-000281	R-CARBON;1000HM,5%,1/8W,AA,TP,1.8X3.2MM	
R406	2007-001010	R-CHIP;51Kohm,5%,1/10W,TP,160	Not used SECAM
R408	2007-000122	R-CHIP;1.2Kohm,5%,1/10W,TP,16	Not used SECAM

R440	2001-000362	R-CARBON;150OHM,5%,1/8W,AA,TP	Not used SECAM
R441	2007-000116	R-CHIP;120ohm,5%,1/10W,TP,160	Not used SECAM
TM401	AC40-00031A	TM BLOCK,TCPL061PD20A,PAL B/G + SECAM,	SECAM Only
	AC40-00032A	TM BLOCK,TCM061PD20A,PAL I,	U.K Only
	AC40-00029A	TM BLOCK,TCMK061PD20A,PAL B/	Other Only
W404	2001-000760	R-CARBON;470OHM,5%,1/8W,AA,TP,1.8X3.2MM	
ZD401	0403-000390	DIODE-ZENER;UZP33B,31.4-34.6V,1000mW,DO-	
HI-FI PARTS			
C501	2401-000408	C-AL;10uF,20%,16V,GP,TP,3.5x5.2.5	
C502	2203-005148	C-CER,CHIP;100nF,10%,16V,X7R,TP,1608	
C503	2401-000909	C-AL;22uF,20%,16V,GP,TP,5x5.2.5	
C504	2401-000408	C-AL;10uF,20%,16V,GP,TP,3.5x5.2.5	
C505	2401-001249	C-AL;4.7uF,20%,35V,GP,TP,4x5.2.5	
C506	2203-000257	C-CER,CHIP;10nF,10%,50V,X7R,TP,1608	
C507	2401-000909	C-AL;22uF,20%,16V,GP,TP,5x5.2.5	
C508	2203-000888	C-CER,CHIP;4.7nF,10%,50V,X7R,TP,1608	
C510	2401-001502	C-AL;47uF,20%,16V,GP,TP,6.3x5.2.5	
C511	2203-000257	C-CER,CHIP;10nF,10%,50V,X7R,TP,1608	
C513	2203-000257	C-CER,CHIP;10nF,10%,50V,X7R,TP,1608	
C517	2203-000888	C-CER,CHIP;4.7nF,10%,50V,X7R,TP,1608	
C518	2401-000909	C-AL;22uF,20%,16V,GP,TP,5x5.2.5	
C519	2203-000257	C-CER,CHIP;10nF,10%,50V,X7R,TP,1608	
C520	2401-001249	C-AL;4.7uF,20%,35V,GP,TP,4x5.2.5	
C521	2401-000408	C-AL;10uF,20%,16V,GP,TP,3.5x5.2.5	
C522	2203-005148	C-CER,CHIP;100nF,10%,16V,X7R,TP,1608	
C523	2203-005148	C-CER,CHIP;100nF,10%,16V,X7R,TP,1608	
C524	2401-001249	C-AL;4.7uF,20%,35V,GP,TP,4x5.2.5	
C525	2401-001249	C-AL;4.7uF,20%,35V,GP,TP,4x5.2.5	
C526	2401-002165	C-AL;100uF,20%,16V,GP,TP,6.3x7.5	
C527	2202-000797	C-CERAMIC,MLC-AXIAL;10NF,30%,16V,Y5S,TP,	
C529	2401-001250	C-AL;4.7uF,20%,35V,GP,TP,4x5,5	
C530	2203-005148	C-CER,CHIP;100nF,10%,16V,X7R,TP,1608	
C535	2203-005148	C-CER,CHIP;100nF,10%,16V,X7R,TP,1608	
C536	2203-005148	C-CER,CHIP;100nF,10%,16V,X7R,TP,1608	
C537	2401-000665	C-AL;2.2uF,20%,50V,GP,TP,3.5x5.5	
C538	2401-002569	C-AL;2.2uF,20%,50V,GP,TP,4x5.2.5	
C539	2401-001250	C-AL;4.7uF,20%,35V,GP,TP,4x5,5	
C540	2401-001250	C-AL;4.7uF,20%,35V,GP,TP,4x5,5	
C541	2401-000588	C-AL;1uF,20%,50V,GP,TP,3x5,2.5	
D501	0402-000127	DIODE-RECTIFIER;1N4002,100V,1A,DO-41,TP	
IC501	1204-001920	IC-AUDIO PROCESSOR;LA72646M,QFP,80P,14X1	
R501	2001-000766	R-CARBON;43KOHM,5%,1/8W,AA,TP,1.8X3.2MM	
R502	2007-001056	R-CHIP;6.2Kohm,5%,1/10W,TP,1608	
R503	2001-000780	R-CARBON;470OHM,5%,1/8W,AA,TP,1.8X3.2MM	
R505	2001-000766	R-CARBON;43KOHM,5%,1/8W,AA,TP,1.8X3.2MM	
R506	2007-001056	R-CHIP;6.2Kohm,5%,1/10W,TP,1608	
R507	2001-000766	R-CARBON;43KOHM,5%,1/8W,AA,TP,1.8X3.2MM	
R508	2007-001056	R-CHIP;6.2Kohm,5%,1/10W,TP,1608	
R509	2007-000087	R-CHIP;6.8Kohm,5%,1/10W,TP,1608	
R510	2007-000913	R-CHIP;43Kohm,5%,1/10W,TP,1608	
R511	2007-000950	R-CHIP;10Kohm,5%,1/10W,TP,1608	
R512	2001-000662	R-CARBON;33KOHM,5%,1/8W,AA,TP,1.8X3.2MM	
R517	2007-000087	R-CHIP;6.8Kohm,5%,1/10W,TP,1608	
R518	2007-000913	R-CHIP;43Kohm,5%,1/10W,TP,1608	
R519	2007-001056	R-CHIP;6.2Kohm,5%,1/10W,TP,1608	
R520	2001-000766	R-CARBON;43KOHM,5%,1/8W,AA,TP,1.8X3.2MM	
R521	2007-000087	R-CHIP;6.8Kohm,5%,1/10W,TP,1608	
R522	2007-001071	R-CHIP;6.8Kohm,5%,1/8W,TP,2012	
R533	2007-000003	R-CHIP;43Kohm,5%,1/8W,TP,2012	
R540	2001-000766	R-CARBON;43KOHM,5%,1/8W,AA,TP,1.8X3.2MM	
R545	2007-000512	R-CHIP;2.4Kohm,5%,1/10W,TP,1608	
R549	2007-000078	R-CHIP;1Kohm,5%,1/10W,TP,1608	
R550	2001-000766	R-CARBON;43KOHM,5%,1/8W,AA,TP,1.8X3.2MM	
R551	2007-000093	R-CHIP;20Kohm,5%,1/10W,TP,1608	

R552	2007-000913	R-CHIP;43Kohm,5%,1/10W,TP,1608	
R553	2007-000093	R-CHIP;20Kohm,5%,1/10W,TP,1608	
R570	2007-000078	R-CHIP;1Kohm,5%,1/10W,TP,1608	
R571	2007-000096	R-CHIP;56Kohm,5%,1/10W,TP,1608	
SECAM PARTS			
C3S01	2203-000257	C-CER,CHIP;10nF,10%,50V,X7R,TP,1608	SECAM Only
C3S02	2401-000598	C-AL;1uF,20%,50V,GP,TP,4x7.5	SECAM Only
C3S03	2203-000257	C-CER,CHIP;10nF,10%,50V,X7R,TP,1608	SECAM Only
C3S04	2401-000598	C-AL;1uF,20%,50V,GP,TP,4x7.5	SECAM Only
C3S05	2203-005148	C-CER,CHIP;100nF,10%,16V,X7R,TP,1608	SECAM Only
C3S06	2401-001324	C-AL;0.47UF,20%,50V,GP,BK,3X5,2.5	SECAM Only
C3S07	2007-000070	R-CHIP;0ohm,5%,1/10W,TP,1608	SECAM Only
C3S08	2203-005148	C-CER,CHIP;100nF,10%,16V,X7R,TP,1608	SECAM Only
C3S09	2401-001324	C-AL;0.47UF,20%,50V,GP,BK,3X5,2.5	SECAM Only
C3S10	2401-003107	C-AL;47uF,20%,16V,GP,TP,5x7.5	SECAM Only
C3S11	2203-005148	C-CER,CHIP;100nF,10%,16V,X7R,TP,1608	SECAM Only
C3S12A	2203-000491	C-CER,CHIP,2.2nF,10%,50V,X7R,TP,1608,-	SECAM Only
C3S14	2401-000665	C-AL;2.2uF,20%,50V,GP,TP,3.5x5,5	SECAM Only
C3S14A	2203-000491	C-CER,CHIP,2.2nF,10%,50V,X7R,TP,1608,-	SECAM Only
C3S15	2203-000440	C-CER,CHIP,1nF,10%,50V,X7R,TP,1608,-	SECAM Only
IC3S01	1204-001921	IC-CHROMA;LA70100M,SOP,30P,375MIL,PLASTI	SECAM Only
R3S01	2007-000078	R-CHIP;1Kohm,5%,1/10W,TP,1608	SECAM Only
R3S02	2001-000435	R-CARBON;1MOHM,5%,1/8W,AA,TP,1.8X3.2MM	SECAM Only
A2/NICAM PARTS			
C4N01	2203-000140	C-CER,CHIP;1.5nF,10%,50V,X7R,TP,1608,-	
C4N02	2401-000408	C-AL;10uF,20%,16V,GP,TP,3.5x5.2.5	
C4N03	2203-001607	C-CER,CHIP;0.22nF,5%,50V,NP0,-,1608	
C4N04	2401-000665	C-AL;2.2uF,20%,50V,GP,TP,3.5x5,5	
C4N05	2203-000257	C-CER,CHIP;10nF,10%,50V,X7R,TP,1608	
C4N06	2203-000257	C-CER,CHIP;10nF,10%,50V,X7R,TP,1608	
C4N07	2203-001656	C-CER,CHIP;0.47nF,5%,50V,NP0,TP,1608	
C4N08	2203-000140	C-CER,CHIP,1.5nF,10%,50V,X7R,TP,1608,-	
C4N09	2401-000408	C-AL;10uF,20%,16V,GP,TP,3.5x5.2.5	
C4N10	2401-000408	C-AL;10uF,20%,16V,GP,TP,3.5x5.2.5	
C4N11	2401-002165	C-AL;3.3UF,20%,50V,GP,BK,4X5,2.5	
C4N12	2203-005148	C-CER,CHIP;100nF,10%,16V,X7R,TP,1608	
C4N13	2203-005148	C-CER,CHIP;100nF,10%,16V,X7R,TP,1608	
C4N14	2401-000408	C-AL;10uF,20%,16V,GP,TP,3.5x5.2.5	
C4N15	2203-005148	C-CER,CHIP;100nF,10%,16V,X7R,TP,1608	
C4N16	2401-001502	C-AL;47uF,20%,16V,GP,TP,6.3x5.2.5	
C4N17	2203-001656	C-CER,CHIP;0.47nF,5%,50V,NP0,TP,1608	
C4N18	2203-001656	C-CER,CHIP;0.47nF,5%,50V,NP0,TP,1608	
C4N19	2203-000998	C-CER,CHIP;0.047NF,5%,50V,C0G,TP,1608	
C4N21	2201-002069	C-CERAMIC,DISC;0.0015NF,0.25PF,50V,C0G,T	
C4N22	2201-002069	C-CERAMIC,DISC;0.0015NF,0.25PF,50V,C0G,T	
C4N23	2401-000598	C-AL;1uF,20%,50V,GP,TP,4x7.5	
C4N24	2401-000598	C-AL;1uF,20%,50V,GP,TP,4x7.5	
C4N25	2203-005148	C-CER,CHIP;100nF,10%,16V,X7R,TP,1608	
C4N30	2203-000257	C-CER,CHIP;10nF,10%,50V,X7R,TP,1608	
D4N01	0407-000101	DIODE-SWITCHING;1N4148,75V,150MA,DO-35,T	
D4N02	0407-000101	DIODE-SWITCHING;1N4148,75V,150MA,DO-35,T	
IC4N01	1204-001765	IC-AUDIO PROCESSOR;MSP3417D(PDIP),PDIP,4	
	1204-001766	IC-AUDIO PROCESSOR;MSP3407DIP	A2 Only
L4N01	2702-000160	INDUCTOR-RADIAL;4.7uH,10%,6.0x6.4mm	
L4N02	2702-000105	INDUCTOR-RADIAL;100uH,10%,6.2x7.4mm	
L4N03	2702-000160	INDUCTOR-RADIAL;4.7uH,10%,6.0x6.4mm	
L4N04	3301-000297	BEAD-AXIAL;75ohm,3.6x1.2x5.7mm,,TP,,	
R4N21	2007-000078	R-CHIP;1Kohm,5%,1/10W,TP,1608	
R4N02	2001-000281	R-CARBON;100OHM,5%,1/8W,AA,TP,1.8X3.2MM	
R4N03	2001-000281	R-CARBON;100OHM,5%,1/8W,AA,TP,1.8X3.2MM	
R4N04	2007-000074	R-CHIP;100ohm,5%,1/10W,TP,1608	
R4N05	2007-000074	R-CHIP;100ohm,5%,1/10W,TP,1608	
R4N06	2007-000074	R-CHIP;100ohm,5%,1/10W,TP,1608	
XT4N01	2801-004095	CRYSTAL-UNIT;18.432MHZ,20PPM,20-AAA,16PF	

OSD/VPS/PDC PARTS			
C6P01	2203-000257	C-CER,CHIP;10nF,10%,50V,X7R,TP,1608	
C6P04	2203-000681	C-CER,CHIP,0.027NF,5%,50V,C0G,TP,1608	
C6P05	2203-000681	C-CER,CHIP,0.027NF,5%,50V,C0G,TP,1608	
C6P06	2203-000440	C-CER,CHIP;1nF,10%,50V,X7R,TP,1608,-	
C6P07	2401-002299	C-AL;4.7uF,20%,50V,GP,TP,5x7,5	
C6P08	2203-001071	C-CER,CHIP;0.056NF,5%,50V,C0G,TP,1608	
C6P10	2401-000598	C-AL;1uF,20%,50V,GP,TP,4x7.5	
C6P11	2401-000598	C-AL;1uF,20%,50V,GP,TP,4x7.5	
C6P12	2401-002165	C-AL;100uF,20%,16V,GP,TP,6.3x7.5	
C6P13	2203-005148	C-CER,CHIP;100nF,10%,16V,X7R,TP,1608	
C6P15	2203-001140	C-CER,CHIP,68nF,10%,16V,X7R,TP,1608	
D6P01	0401-000101	DIODE-SWITCHING;1N4148,75V,150MA,DO-35,T	
IC6P01	1204-001794	IC-AUDIO PROCESSOR;LC74775NM-9806,MFP,30	
L6P01	2701-000002	INDUCTOR-AXIAL;100UH,10%,4298	
L6P03	2701-000160	INDUCTOR-AXIAL;22uH,5%,2434	
L6P05	2701-000165	INDUCTOR-AXIAL;27uH,5%,2434	
Q6P01	0501-000303	TR-SMALL SIGNAL;KSA733,PNP,250mW,TO-92,T	
Q6P02	0501-000303	TR-SMALL SIGNAL;KSA733,PNP,250mW,TO-92,T	
Q6P04	0501-000398	TR-SMALL SIGNAL;KSC945,NPN,250mW,TO-92,T	
R6P01	2001-000281	R-CARBON;100OHM,5%,1/8W,AA,TP,1.8X3.2MM	
R6P02	2001-000281	R-CARBON,100OHM,5%,1/8W,AA,TP,1.8X3.2MM	
R6P03	2007-000081	R-CHIP;2.7Kohm,5%,1/10W,TP,1608	
R6P04	2007-000090	R-CHIP;10Kohm,5%,1/10W,TP,1608	
R6P05	2007-000090	R-CHIP,10Kohm,5%,1/10W,TP,1608	
R6P06	2007-000086	R-CHIP;5.6Kohm,5%,1/10W,TP,1608	
R6P07	2007-000075	R-CHIP;220ohm,5%,1/10W,TP,1608	
R6P09	2001-000005	R-CARBON;330ohm,5%,1/8W,AA,TP,1.8x3.2mm	
R6P09	2007-000070	R-CHIP;0ohm,5%,1/10W,TP,1608	
R6P10	2001-000515	R-CARBON;220OHM,5%,1/8W,AA,TP,1.8X3.2MM	
R6P12	2001-000734	R-CARBON;4.7KOHM,5%,1/8W,AA,TP,1.8X3.2M	
R6P13	2007-000097	R-CHIP;47Kohm,5%,1/10W,TP,1608	
R6P14	2007-000123	R-CHIP,1.5Kohm,5%,1/10W,TP,1608	
INPUT-OUTPUT PARTS			
C812	2401-000522	C-AL;22uF,20%,16V,GP,TP,5x5,5	
C813	2401-000522	C-AL;22uF,20%,16V,GP,TP,5x5,5	
C814	2401-000522	C-AL;22uF,20%,16V,GP,TP,5x5,5	
C815	2401-000522	C-AL;22uF,20%,16V,GP,TP,5x5,5	
C816	2401-002165	C-AL;100uF,20%,16V,GP,TP,6.3x7,5	
C817	2203-000257	C-CER,CHIP,10nF,10%,50V,X7R,TP,1608	
C818	2203-000783	C-CER,CHIP,0.33NF,5%,50V,C0G,TP,1608	
C819	2203-000783	C-CER,CHIP,0.33NF,5%,50V,C0G,TP,1608	
C820	2203-000783	C-CER,CHIP,0.33NF,5%,50V,C0G,TP,1608	
C821	2203-000783	C-CER,CHIP,0.33NF,5%,50V,C0G,TP,1608	
C822A	2203-000236	C-CER,CHIP,0.1NF,5%,50V,C0G,TP,1608	
C823	2203-000783	C-CER,CHIP,0.33NF,5%,50V,C0G,TP,1606	
C824	2203-000783	C-CER,CHIP,0.33NF,5%,50V,C0G,TP,1606	
C825	2203-000783	C-CER,CHIP,0.33NF,5%,50V,C0G,TP,1606	
C826	2203-000783	C-CER,CHIP,0.33NF,5%,50V,C0G,TP,1606	
C835	2401-001479	C-AL;470UF,20%,10V,GP,TP,6.3*11MM,-	
C837	2203-000257	C-CER,CHIP,10nF,10%,50V,X7R,TP,1608	
C840	2203-005148	C-CER,CHIP;100nF,10%,16V,X7R,TP,1608	
C851	2401-000922	C-AL;22uF,20%,16V,GP,TP,5x5,5	
C852	2401-000922	C-AL;22uF,20%,16V,GP,TP,5x5,5	
C853	2203-000491	C-CER,CHIP,2.2nF,10%,50V,X7R,TP,1608,-	
C854	2203-000491	C-CER,CHIP,2.2nF,10%,50V,X7R,TP,1608,-	
C857	2203-000888	C-CER,CHIP,4.7nF,10%,50V,X7R,TP,1608	
C858	2401-000522	C-AL;22uF,20%,16V,GP,TP,5x5,5	
C860	2401-000522	C-AL;22uF,20%,16V,GP,TP,5x5,5	
D805	0401-000101	DIODE-SWITCHING;1N4148,75V,150MA,DO-35,T	
IC802	0601-002741	IC-CMOS LOGIC;BU4053BCFV,MUX,SSOP,16P,17	
J030	2007-000070	R-CHIP;0ohm,5%,1/10W,TP,1608	
J11C	2007-000070	R-CHIP;0ohm,5%,1/10W,TP,1608	SECAM Only
J330	2007-000070	R-CHIP;0ohm,5%,1/10W,TP,1608	
J50A	2007-000070	R-CHIP;0ohm,5%,1/10W,TP,1608	

J805	2007-000070	R-CHIP;0ohm,5%,1/10W,TP,1608	
J810	2007-000070	R-CHIP;0ohm,5%,1/10W,TP,1608	
J811	2007-000070	R-CHIP;0ohm,5%,1/10W,TP,1608	
J812	2007-000070	R-CHIP;0ohm,5%,1/10W,TP,1608	
J813	2007-000070	R-CHIP;0ohm,5%,1/10W,TP,1608	
J814	2007-000070	R-CHIP;0ohm,5%,1/10W,TP,1608	
JC801	3722-001573	JACK-SCART;42P/ZR,-,SN,BLK/BLU,#20-28	
JC802	AC37-22002N	JACK-PIN;3.2mm,DPAE-9836,3P(1),HI-FI,SV	
L803	2701-000181	INDUCTOR-AXIAL;33uH,5%,2434	
L804	2701-000181	INDUCTOR-AXIAL;33uH,5%,2434	
L805	2701-000181	INDUCTOR-AXIAL;33uH,5%,2434	
L806	2701-000181	INDUCTOR-AXIAL;33uH,5%,2434	
L807	2701-000181	INDUCTOR-AXIAL;33uH,5%,2434	
L808	2701-000181	INDUCTOR-AXIAL;33uH,5%,2434	
L809	2701-000181	INDUCTOR-AXIAL;33uH,5%,2434	
L810	2701-000181	INDUCTOR-AXIAL;33uH,5%,2434	
L811	2701-000181	INDUCTOR-AXIAL;33uH,5%,2434	
L812	2701-000181	INDUCTOR-AXIAL;33uH,5%,2434	
L814	AC27-92001M	COIL-INDUCTOR;RH3.5X6.5RS,BEAD(RADIAL),-	
L890	2701-000002	INDUCTOR-AXIAL,100UH,10%,4298	
Q802	0504-000119	TR-DIGITAL;KSR1004,NPN,300MW,47K/47K,TO-	
Q803	0504-000129	TR-DIGITAL;KSR1104,NPN,200mW,47K/47K,SOT	
Q804	0504-000142	TR-DIGITAL;KSR2001,PNP,300MW,4.7K/4.7K,T	
Q805	0504-000152	TR-DIGITAL;KSR2101,PNP,200mW,4.7K/4.7K,S	
Q808	0504-000119	TR-DIGITAL;KSR1004,NPN,300MW,47K/47K,TO-	
Q809	0501-000341	TR-SMALL SIGNAL;KSC1623-L,NPN,200mW,SOT-	
Q810	0501-000341	TR-SMALL SIGNAL;KSC1623-L,NPN,200mW,SOT-	
Q811	0501-000341	TR-SMALL SIGNAL;KSC1623-L,NPN,200mW,SOT-	
Q891A	0501-000398	TR-SMALL SIGNAL;KSC945,NPN,25	Not used SECAM
Q891B	0501-000398	TR-SMALL SIGNAL;KSC945,NPN,25	Not used SECAM
R801A	2007-000116	R-CHIP;120ohm,5%,1/10W,TP,1608	
R802	2007-000079	R-CHIP;1.8Kohm,5%,1/10W,TP,1608	
R803	2007-000079	R-CHIP;1.8Kohm,5%,1/10W,TP,1608	
R805	2007-000643	R-CHIP,270ohm,5%,1/10W,TP,1608	
R806	2007-000643	R-CHIP,270ohm,5%,1/10W,TP,1608	
R807	2007-001134	R-CHIP;68ohm,5%,1/10W,TP,1608	
R808	2007-001167	R-CHIP;75ohm,5%,1/10W,TP,1608	
R809	2007-001167	R-CHIP;75ohm,5%,1/10W,TP,1608	
R810	2007-000643	R-CHIP;270ohm,5%,1/10W,TP,1608	
R811	2007-000643	R-CHIP;270ohm,5%,1/10W,TP,1608	
R813	2007-000643	R-CHIP;270ohm,5%,1/10W,TP,1608	
R814	2007-000643	R-CHIP;270ohm,5%,1/10W,TP,1608	
R815	2007-000643	R-CHIP;270ohm,5%,1/10W,TP,1608	
R816	2007-000643	R-CHIP;270ohm,5%,1/10W,TP,1608	
R819	2007-000643	R-CHIP;270ohm,5%,1/10W,TP,1608	
R820	2007-000643	R-CHIP;270ohm,5%,1/10W,TP,1608	
R821	2007-000134	R-CHIP;33Kohm,5%,1/10W,TP,1608	
R822	2007-000094	R-CHIP;22Kohm,5%,1/10W,TP,1608	
R822B	2007-001167	R-CHIP;75ohm,5%,1/10W,TP,1608	
R825	2007-000094	R-CHIP;4.7Kohm,5%,1/10W,TP,1608	
R827	2007-000101	R-CHIP,82Kohm,5%,1/10W,TP,1608	
R828	2007-000101	R-CHIP,82Kohm,5%,1/10W,TP,1608	
R829	2007-000101	R-CHIP,82Kohm,5%,1/10W,TP,1608	
R830	2007-000101	R-CHIP,82Kohm,5%,1/10W,TP,1608	
R835	2007-000101	R-CHIP,82Kohm,5%,1/10W,TP,1608	
R836	2007-000101	R-CHIP,82Kohm,5%,1/10W,TP,1608	
R839	2007-000070	R-CHIP;0ohm,5%,1/10W,TP,1608	
R841	2007-000119	R-CHIP;56Kohm,5%,1/10W,TP,1608	
R842	2007-000119	R-CHIP;56Kohm,5%,1/10W,TP,1608	
R843	2007-000119	R-CHIP;56Kohm,5%,1/10W,TP,1608	
R844	2007-001167	R-CHIP;75ohm,5%,1/10W,TP,1608	
R851	2007-000097	R-CHIP;47Kohm,5%,1/10W,TP,1608	
R852	2007-000097	R-CHIP;47Kohm,5%,1/10W,TP,1608	
R891A	2007-000090	R-CHIP;10Kohm,5%,1/10W,TP,160	Not used SECAM
R891B	2007-000090	R-CHIP;10Kohm,5%,1/10W,TP,160	Not used SECAM
R892A	2007-001179	R-CHIP;8.2Kohm,5%,1/10W,TP,16	Not used SECAM

Loc.No	Part No	Description ; Specification	Remark
R892B	2007-001179	R-CHIP;8.2Kohm,5%,1/10W,TP,16	Not used SECAM
R893A	2007-000122	R-CHIP;1.2Kohm,5%,1/10W,TP,16	Not used SECAM
R893B	2007-000122	R-CHIP;1.2Kohm,5%,1/10W,TP,16	Not used SECAM
R894A	2007-000655	R-CHIP;27Kohm,5%,1/10W,TP,160	Not used SECAM
R894B	2007-000655	R-CHIP;27Kohm,5%,1/10W,TP,160	Not used SECAM
ZD801	0403-000297	DIODE-ZENER;MTZ6.2B,5.96-6.27V,500MW,DO-	
ZD805	0403-001211	DIODE-ZENER;MTZJ12B,11.8-12.3V,500MW,DO-	
ZD806	0403-001083	DIODE-ZENER;UDZ9.1B,8.85-9.23V,200MW,UMD	
ZD807	0403-001083	DIODE-ZENER;UDZ9.1B,8.85-9.23V,200MW,UMD	
ZD809	0403-001083	DIODE-ZENER;UDZ9.1B,8.85-9.23V,200MW,UMD	
ZD810	0403-001083	DIODE-ZENER;UDZ9.1B,8.85-9.23V,200MW,UMD	
ZD811	0403-000720	DIODE-ZENER;MTZJ9.1B,8.57-9.01V,500MW,DO	
ZD851	0403-000720	DIODE-ZENER;MTZJ9.1B,8.57-9.01V,500MW,DO	
ZD852	0403-000720	DIODE-ZENER;MTZJ9.1B,8.57-9.01V,500MW,DO	
ZD853	0403-000720	DIODE-ZENER;MTZJ9.1B,8.57-9.01V,500MW,DO	
ZD854	0403-000720	DIODE-ZENER;MTZJ9.1B,8.57-9.01V,500MW,DO	
ZD863	0403-001083	DIODE-ZENER;UDZ9.1B,8.85-9.23V,200MW,UMD	
ZD864	0403-000720	DIODE-ZENER;MTZJ9.1B,8.57-9.01V,500MW,DO	

DISPLAY/FUNCTION MATRIX PARTS

Loc.No	Part No	Description ; Specification	Remark
BD701	3301-001419	BEAD-SMD;-,220,-,500,TP,-,0.3	
BD702	3301-001419	BEAD-SMD;-,220,-,500,TP,-,0.3	
BD703	3301-001419	BEAD-SMD;-,220,-,500,TP,-,0.3	
C701	2401-002165	C-AL;100uF,20%,16V,GP,TP,6.3x7.5	
C702	2203-000257	C-CER,CHIP;10nF,10%,50V,X7R,TP,1608	
C703	2203-000440	C-CER,CHIP;1nF,10%,50V,X7R,TP,1608,-	
C706	2203-000239	C-CER,CHIP;0.1NF,5%,50V,COG,TP,2012	
C707	2401-001992	C-AL;2200UF,20%,10V,WT,TP,10X20MM,5	
C708A	2203-000257	C-CER,CHIP;10nF,10%,50V,X7R,TP,1608	
C712	2203-000491	C-CER,CHIP;2.2nF,10%,50V,X7R,TP,1608,-	
C714	2203-000491	C-CER,CHIP;2.2nF,10%,50V,X7R,TP,1608,-	
CN701	3710-001918	CONNECTOR-SOCKET;6P,1R,2MM,ANGLE,SN	
CN701A	3711-005312	CONNECTOR-HEADER;3WALL,6P,1R,2MM,STRAIGH	
D701	0401-000101	DIODE-SWITCHING;1N4148,75V,150MA,DO-35,T	
D702	0401-000101	DIODE-SWITCHING;1N4148,75V,150MA,DO-35,T	
D703	0401-000101	DIODE-SWITCHING;1N4148,75V,150MA,DO-35,T	
D704	0401-000101	DIODE-SWITCHING;1N4148,75V,150MA,DO-35,T	
D705	0401-000101	DIODE-SWITCHING;1N4148,75V,150MA,DO-35,T	
DT701	AC07-00069A	LED DISPLAY;BCD-9027E,SV-DVD440,5-DIGIT,	
IC701	1003-001561	IC-LED DRIVER;PT6961,SOP,32P,300MIL,-,40	
JK701	3722-001943	JACK-PIN;3P,8.3P,NI,BLK,-	
L701	2701-000002	INDUCTOR-AXIAL;100UH,10%,4298	
L702	2701-000002	INDUCTOR-AXIAL;100UH,10%,4298	
R701	2001-000429	R-CARBON;1KOHM,5%,1/8W,AA,TP,1.8X3.2MM	
R702	2007-000078	R-CHIP;1Kohm,5%,1/10W,TP,1608	
R703	2007-000078	R-CHIP;1Kohm,5%,1/10W,TP,1608	
R704	2001-000837	R-CARBON;51KOHM,5%,1/8W,AA,TP,1.8X3.2MM	
R711	2007-000090	R-CHIP;10Kohm,5%,1/10W,TP,1608	
R712	2007-001167	R-CHIP;75ohm,5%,1/10W,TP,1608	
RM701	AC32-00006A	MODULE REMOCON;TSOP2238WE1,38KHZ,-,5.08m	
SW701	3404-001182	SWITCH-TACT;DC12V,50MA,100GF,6.0X6.0X5.0	
SW702	3404-001182	SWITCH-TACT;DC12V,50MA,100GF,6.0X6.0X5.0	
SW703	3404-001182	SWITCH-TACT;DC12V,50MA,100GF,6.0X6.0X5.0	
SW704	3404-001182	SWITCH-TACT;DC12V,50MA,100GF,6.0X6.0X5.0	
SW705	3404-001182	SWITCH-TACT;DC12V,50MA,100GF,6.0X6.0X5.0	
SW707	3404-001182	SWITCH-TACT;DC12V,50MA,100GF,6.0X6.0X5.0	
SW708	3404-001182	SWITCH-TACT;DC12V,50MA,100GF,6.0X6.0X5.0	
SW709	3404-001182	SWITCH-TACT;DC12V,50MA,100GF,6.0X6.0X5.0	
SW710	3404-001182	SWITCH-TACT;DC12V,50MA,100GF,6.0X6.0X5.0	
SW713	3404-001182	SWITCH-TACT;DC12V,50MA,100GF,6.0X6.0X5.0	
SW714	3404-001182	SWITCH-TACT;DC12V,50MA,100GF,6.0X6.0X5.0	
SW715	3404-001182	SWITCH-TACT;DC12V,50MA,100GF,6.0X6.0X5.0	
SW716	3404-001182	SWITCH-TACT;DC12V,50MA,100GF,6.0X6.0X5.0	
W735	2202-002037	C-CERAMIC,MLC-AXIAL;100nF,80-	Not used SECAM
W737	2202-002037	C-CERAMIC,MLC-AXIAL;100nF,80-	Not used SECAM
ZD701	0403-000720	DIODE-ZENER;MTZJ9.1B,8.57-9.01V,500MW,DO	

Loc.No	Part No	Description ; Specification	Remark
601	AC92-01553W	ASSY PCB-MAIN;SV-DVD340/FES,KAISER	DVD-V340/FES Only
	AC92-01553V	ASSY PCB-MAIN;SV-DVD340/AFR,KAISER	DVD-V340/AFR Only

S.M.P.S. PARTS

Loc.No	Part No	Description ; Specification	Remark
BD1S01	AC27-92001M	COIL-INDUCTOR;RH3.5X6.5RS,BEAD(RADIAL),-	
BD1S02	AC27-92001M	COIL-INDUCTOR;RH3.5X6.5RS,BEAD(RADIAL),-	
BD1SS3	AC27-92001M	COIL-INDUCTOR;RH3.5X6.5RS,BEAD(RADIAL),-	
C1SD12	2305-001029	C-FILM,LEAD-PEF;10nF,10%,630V,TP,12x5x12	
C1SD13	2301-000383	C-FILM,LEAD-PEF;10nF,5%,50V,TP,6x7x3.2mm	
C1SD15	2201-000129	C-CERAMIC,DISC;0.1NF,10%,1KV,Y5P,TP,7X4M	
C1SF02	2401-002608	C-AL;33uF,20%,35V,GP,TP,5x11,5	
C1SS01	2301-001157	C-FILM,LEAD-PEF;47nF,10%,275V,BK,17.5x12	⚠
C1SS02	2301-001157	C-FILM,LEAD-PEF;47nF,10%,275V,BK,17.5x12	⚠
C1SS03	2201-002044	C-CERAMIC,DISC;0.1NF,10%,400V,Y5P,TP,8.5	⚠
C1SS05	2201-002044	C-CERAMIC,DISC;0.1NF,10%,400V,Y5P,TP,8.5	⚠
C1SS06	2201-002044	C-CERAMIC,DISC;0.1NF,10%,400V,Y5P,TP,8.5	⚠
C1SS10	2401-003303	C-AL;82uF,20%,400V,GP,BK,22X30,10	
C1SS11	2401-000598	C-AL;1uF,20%,50V,GP,TP,4x7,5	
C1SS12	2401-002299	C-AL;4.7uF,20%,50V,GP,TP,5x7,5	
C1SS15	2401-001992	C-AL;2200UF,20%,10V,WT,TP,10X20MM,5	
C1SS16	2401-003480	C-AL;1000UF,20%,10V,LZ,TP,10X16MM,5	
C1SS17	2401-001992	C-AL;2200UF,20%,10V,WT,TP,10X20MM,5	
C1SS18	2401-001992	C-AL;2200UF,20%,10V,WT,TP,10X20MM,5	
C1SS19	2401-000385	C-AL;10uF,20%,100V,GP,TP,6.3x11,5	
C1SS21	2401-001126	C-AL;330uF,20%,25V,WT,TP,10x12.5,5	
C1SS22	2401-001126	C-AL;330uF,20%,25V,WT,TP,10x12.5,5	
C1SS26	2401-001126	C-AL;330uF,20%,25V,WT,TP,10x12.5,5	
C1SS27	2301-000129	C-FILM,LEAD-PEF;100nF,5%,50V,TP,10X9X4.3	
CN01	3711-005565	CONNECTOR-HEADER;NOWALL,24P,1R,2mm,STRAI	
CN1SS1	3711-000178	CONNECTOR-HEADER;1WALL,2P,1R,3.96mm,STRA	
D1SF01	0401-000101	DIODE-SWITCHING;1N4148,75V,150MA,DO-35,T	
D1SF02	0402-001195	DIODE-RECTIFIER;F1T4,400V,1A,DO-204AC,TP	
D1SS01	0402-001196	DIODE-RECTIFIER;1T5,600V,1A,TS-1,TP	
D1SS02	0402-001196	DIODE-RECTIFIER;1T5,600V,1A,TS-1,TP	
D1SS03	0402-001196	DIODE-RECTIFIER;1T5,600V,1A,TS-1,TP	
D1SS04	0402-001196	DIODE-RECTIFIER;1T5,600V,1A,TS-1,TP	
D1SS11	0402-000012	DIODE-RECTIFIER;UF4007,1KV,1A,DO-41,TP	
D1SS12	0404-001225	DIODE-SCHOTTKY;SRAF560,60V,5000mA,;TO-22	
D1SS13	0404-001225	DIODE-SCHOTTKY;SRAF560,60V,5000mA,;TO-22	
D1SS14	0404-001225	DIODE-SCHOTTKY;SRAF560,60V,5000mA,;TO-22	
D1SS15	0402-001195	DIODE-RECTIFIER;F1T4,400V,1A,DO-204AC,TP	
D1SS16	0402-001194	DIODE-RECTIFIER;UG2D,200V,2A,-,TP	
D1SS19	0402-001195	DIODE-RECTIFIER;F1T4,400V,1A,DO-204AC,TP	
F1SS01	3601-001123	FUSE-CARTRIDGE;250V,1.6A,TIME-LAG,CERAMI	⚠
FZ01	3601-001240	FUSE-RADIAL LEAD;50V,1A,-,-,5.0x4.0x5.0m	
FZ02	3601-001240	FUSE-RADIAL LEAD;50V,1A,-,-,5.0x4.0x5.0m	
IC1S02	0604-001028	PHOTO-COUPLER;TR,50-600%,250mW,DIP-4,ST	⚠
IC1S03	AC14-12006D	IC;KA431Z,TO-92,TAPING	
IC1SS2	1203-002805	IC-PWM CONTROLLER;ICE2BS01,PDIP,8P,9.52X	
L1SS01	AC29-00002A	FILTER LINE NOISE;-,30mH,-,-,BLF-2116	
L1SS02	AC29-00003A	FILTER LINE NOISE;-,20mH MIN,-,-,-	⚠
L1SS03	AC27-12001N	COIL CHOKE;10UH-15%,RA,K-30,080,150KHZ,-	
L1SS04	AC27-12001N	COIL CHOKE;10UH-15%,RA,K-30,080,150KHZ,-	
L1SS05	AC27-12001N	COIL CHOKE;10UH-15%,RA,K-30,080,150KHZ,-	
PT1S01	AC26-00012J	TRANS SWITCHING;EER-3126,SLV-D950E,-,-,-	⚠
R1SD11	2006-000273	R-CEMENT;27KOHM,5%,2W,CA,BK,6.4X6.5X18M	
R1SD13	2006-000273	R-CEMENT;27KOHM,5%,2W,CA,BK,6.4X6.5X18M	
R1SD14	2001-000598	R-CARBON;3.3OHM,5%,1/8W,AA,TP,1.8X3.2MM	
R1SF05	2001-000527	R-CARBON;22OHM,5%,1/8W,AA,TP,1.8X3.2MM	
R1SF06	2004-000459	R-METAL;2.2Kohm,1%,1/8W,AA,TP,1.8x3.2m	
R1SF07	2003-000105	R-METAL OXIDE;0.33ohm,5%,2W,AO,TP,6x16mm	
R1SQ11	2001-000281	R-CARBON;100OHM,5%,1/8W,AA,TP,1.8X3.2MM	
R1SR01	2001-000548	R-CARBON;270KOHM,5%,1/8W,AA,TP,1.8X3.2M	
R1SR02	2001-000548	R-CARBON;270KOHM,5%,1/8W,AA,TP,1.8X3.2M	
R1SR03	2001-000548	R-CARBON;270KOHM,5%,1/8W,AA,TP,1.8X3.2M	
R1SS01	2006-000262	R-CEMENT;2.7ohm,10%,2W,CB,TP,7.5x11x20.	

Loc.No	Part No	Description ; Specification	Remark
R1SS08	2001-000793	R-CARBON;47OHM,5%,1/8W,AA,TP,1.8X3.2MM	
R1SS31	2001-000780	R-CARBON;470OHM,5%,1/8W,AA,TP,1.8X3.2MM	
R1SS32	2001-000429	R-CARBON;1KOHM,5%,1/8W,AA,TP,1.8X3.2MM	
R1SS33	2001-000429	R-CARBON;1KOHM,5%,1/8W,AA,TP,1.8X3.2MM	
R1SS34	2004-000869	R-METAL;3Kohm,1%,1/8W,AA,TP,1.8x3.2mm	
R1SS35	2004-000459	R-METAL;2.2Kohm,1%,1/8W,AA,TP,1.8x3.2m	
ZD1SS1	0403-000713	DIODE-ZENER;MTZJ20B,18.63-17.7V,500MW,DO	
ZD1SS2	0403-001318	DIODE-ZENER;MTZJ4.3B,4.17-4.43V,500MW,DO	

POWER DRIVER PARTS

Loc.No	Part No	Description ; Specification	Remark
C1P101	2401-003480	C-AL;1000UF,20%,10V,LZ,TP,10X16MM,5	
C1P102	2401-003336	C-AL;4.7UF,20%,50V,GP,TP,5X5,2	
C1P103	2401-002026	C-AL;10UF,20%,35V,GP,TP,5X5,2.5	
C1P104	2401-000588	C-AL;1uF,20%,50V,GP,TP,3x5,2.5	
C1P105	2401-003336	C-AL;4.7UF,20%,50V,GP,TP,5X5,2	
C1P106	2401-000463	C-AL;10UF,20%,35V,GP,-,5X5,5	
C1P107	2401-002299	C-AL;4.7uF,20%,50V,GP,TP,5x7,5	
C1P109	2401-000414	C-AL;10uF,20%,16V,GP,TP,4x7,5	
C1P110	2401-000414	C-AL;10uF,20%,16V,GP,TP,4x7,5	
C1P111	2401-000463	C-AL;10UF,20%,35V,GP,-,5X5,5	
C1P112	2401-002299	C-AL;4.7uF,20%,50V,GP,TP,5x7,5	
C1P113	2401-000598	C-AL;1uF,20%,50V,GP,TP,4x7,5	
C1P114	2401-002165	C-AL;100uF,20%,16V,GP,TP,6.3x7,5	
C1P115	2401-002165	C-AL;100uF,20%,16V,GP,TP,6.3x7,5	
C1P116	2401-002299	C-AL;4.7uF,20%,50V,GP,TP,5x7,5	
D1P104	0401-000101	DIODE-SWITCHING;1N4148,75V,150MA,DO-35,T	
D1P105	0401-000101	DIODE-SWITCHING;1N4148,75V,150MA,DO-35,T	
D1P106	0401-000101	DIODE-SWITCHING;1N4148,75V,150MA,DO-35,T	
D1P107	0401-000101	DIODE-SWITCHING;1N4148,75V,150MA,DO-35,T	
D1P108	0401-000101	DIODE-SWITCHING;1N4148,75V,150MA,DO-35,T	
D1P130	0402-000127	DIODE-RECTIFIER;1N4002,100V,1A,DO-41,TP	
L1P102	AC27-12001N	COIL CHOKE;10UH-15%,RA,K-30,080,150KHZ,-	
Q1P101	0501-000362	TR-SMALL SIGNAL;KSC2328A-Y,NPN,1000MW,TO	
Q1P102	0504-000142	TR-DIGITAL;KSR2001,PNP,300MW,4.7K,4.7K,T	
Q1P103	0501-000398	TR-SMALL SIGNAL;KSC945,NPN,250mW,TO-92,T	
Q1P104	0501-000362	TR-SMALL SIGNAL;KSC2328A-Y,NPN,1000MW,TO	
Q1P105	0501-000362	TR-SMALL SIGNAL;KSC2328A-Y,NPN,1000MW,TO	
Q1P106	0501-000362	TR-SMALL SIGNAL;KSC2328A-Y,NPN,1000MW,TO	
Q1P107	0501-000362	TR-SMALL SIGNAL;KSC2328A-Y,NPN,1000MW,TO	
Q1P108	0504-000142	TR-DIGITAL;KSR2001,PNP,300MW,4.7K,4.7K,T	
Q1P109	0501-000398	TR-SMALL SIGNAL;KSC945,NPN,250mW,TO-92,T	
Q1P110	0501-000362	TR-SMALL SIGNAL;KSC2328A-Y,NPN,1000MW,TO	
Q1P111	0501-000362	TR-SMALL SIGNAL;KSC2328A-Y,NPN,1000MW,TO	
R1P101	2001-000855	R-CARBON;560OHM,5%,1/4W,AA,TP,2.4X6.4MM	
R1P103	2007-000402	R-CHIP;150ohm,5%,1/10W,TP,1608	
R1P104	2001-000449	R-CARBON;2.2KOHM,5%,1/8W,AA,TP,1.8X3.2M	
R1P105	2001-000969	R-CARBON;75OHM,5%,1/8W,AA,TP,1.8X3.2MM	
R1P109	2001-000362	R-CARBON;150OHM,5%,1/8W,AA,TP,1.8X3.2MM	
R1P110	2001-000449	R-CARBON;2.2KOHM,5%,1/8W,AA,TP,1.8X3.2M	
R1P111	2001-000062	R-CARBON;470OHM,5%,1/4W,AA,TP,2.4X6.4MM	
R1P112	2001-000302	R-CARBON;10OHM,5%,1/8W,AA,TP,1.8X3.2MM	
R1P122	2007-000134	R-CHIP;33Kohm,5%,1/10W,TP,1608	
ZD1P02	0403-001211	DIODE-ZENER;MTZJ12B,11.8-12.3V,500MW,DO-	
ZD1P03	0403-000720	DIODE-ZENER;MTZJ9.1B,8.57-9.01V,500MW,DO	
ZD1P04	0403-000717	DIODE-ZENER;MTZJ5.1B,4.94-5.2V,500MW,DO-	
ZD1P05	0403-001211	DIODE-ZENER;MTZJ12B,11.8-12.3V,500MW,DO-	
ZD1P06	0403-000717	DIODE-ZENER;MTZJ5.1B,4.94-5.2V,500MW,DO-	

SYSTEM CONTROL/SERVO PARTS

Loc.No	Part No	Description ; Specification	Remark
C601	2203-002398	C-CER,CHIP;22nF,10%,50V,X7R,TP,1608	
C602	2401-002095	C-AL;47uF,20%,25V,GP,TP,6.3x5,5	
C605	2203-000257	C-CER,CHIP;10nF,10%,50V,X7R,TP,1608	
C606	2203-000257	C-CER,CHIP;10nF,10%,50V,X7R,TP,1608	
C607	2401-000118	C-AL;1000uF,20%,10V,GP,TP,10x12.5,5	
C607A	2401-003107	C-AL;47uF,20%,16V,GP,TP,5x7,5	
C608	2401-002259	C-AL;0.1F,+80-20%,5.5V,-,TP,12.5x11	
C610	2202-002037	C-CERAMIC,MLC-AXIAL;100nF,80-20%,50V,Y5V	
C618	2401-000360	C-AL;100uF,20%,50V,GP,TP,8x11.5,5	
C618A	2401-002095	C-AL;47uF,20%,25V,GP,TP,6.3x5,5	
C619	2203-000257	C-CER,CHIP;10nF,10%,50V,X7R,TP,1608	
C620	2401-001543	C-AL;47uF,20%,25V,GP,TP,6.3x5mm,2.5	
C621	2203-000257	C-CER,CHIP;10nF,10%,50V,X7R,TP,1608	
C623	2203-000257	C-CER,CHIP;10nF,10%,50V,X7R,TP,1608	
C624	2203-000626	C-CER,CHIP;0.022nF,5%,50V,COG,TP,1608	
C625	2203-000626	C-CER,CHIP;0.022nF,5%,50V,COG,TP,1608	
C626	2203-000626	C-CER,CHIP;0.022nF,5%,50V,COG,TP,1608	
C627	2203-000626	C-CER,CHIP;0.022nF,5%,50V,COG,TP,1608	
C629	2203-000681	C-CER,CHIP;0.027NF,5%,50V,COG,TP,1608	
C633	2203-000257	C-CER,CHIP;10nF,10%,50V,X7R,TP,1608	
C635	2203-000491	C-CER,CHIP;2.2nF,10%,50V,X7R,TP,1608,-	
C636	2203-000491	C-CER,CHIP;2.2nF,10%,50V,X7R,TP,1608,-	
C637	2203-001556	C-CER,CHIP;0.47nF,5%,50V,NPO,TP,1608	
C638	2401-002136	C-AL;4.7UF,20,25V,GP,TP,4X5,5MM,-	
C639	2203-000236	C-CER,CHIP;0.1NF,5%,50V,COG,TP,1608	
C640	2203-005148	C-CER,CHIP;100nF,10%,16V,X7R,TP,1608	
C641	2401-002221	C-AL;100uF,20%,16V,GP,TP,8X5,2.5	
C642	2401-002095	C-AL;47uF,20%,25V,GP,TP,6.3x5,5	
C645	2203-000357	C-CER,CHIP;0.15NF,5%,50V,COG,TP,1608	
C646	2203-005148	C-CER,CHIP;100nF,10%,16V,X7R,TP,1608	
C659A	2203-001140	C-CER,CHIP;68nF,10%,16V,X7R,TP,1608	
C661	2202-002055	C-CERAMIC,MLC-AXIAL;47nF,+80-20%,50V,Y5V	
C688	2401-003107	C-AL;47uF,20%,16V,GP,TP,5x7,5	
C691	2203-000257	C-CER,CHIP;10nF,10%,50V,X7R,TP,1608	
C695	2203-000357	C-CER,CHIP;0.15NF,5%,50V,COG,TP,1608	
C696	2203-000236	C-CER,CHIP;0.1NF,5%,50V,COG,TP,1608	
CN604	AC37-00027A	CONNECTOR-HEADER;20045WS,X-11,T8.5,W17.4	
D603	0401-000101	DIODE-SWITCHING;1N4148,75V,150MA,DO-35,T	
D620	0402-000127	DIODE-RECTIFIER;1N4002,100V,1A,DO-41,TP	
D688	0401-000101	DIODE-SWITCHING;1N4148,75V,150MA,DO-35,T	
D692	0402-000127	DIODE-RECTIFIER;1N4002,100V,1A,DO-41,TP	
IC601	AC09-00506A	IC MICOM;N128-864-38A,SV-DVD440-02,100P	
IC604	AC14-12006C	IC;KA7533,DIP,-	
IC605	1103-001150	IC-EEPROM;24C081,1Kx8,DIP,8P,9.2x6.4mm,2	
IC608	1203-000515	IC-VOL. DETECTOR;7042,TO-92,3P,177MIL,PL	
L603	2701-000002	INDUCTOR-AXIAL;100UH,10%,4298	
L605	2701-000002	INDUCTOR-AXIAL;100UH,10%,4298	
LD601	0601-001317	LED-IR;SIDE-VIEW,2.5mm,75mW,6V,940 TR	
PT601	0604-001275	PHOTO-INTERRUPTER;-,-,-,SNAP,TR	
PT602	0604-001275	PHOTO-INTERRUPTER;-,-,-,SNAP,TR	
Q601	0504-000129	TR-DIGITAL;KSR1104,NPN,200mW,47K/47K,SOT	
R608	2001-000864	R-CARBON;56KOHM,5%,1/8W,AA,TP,1.8X3.2MM	
R609	2001-000864	R-CARBON;56KOHM,5%,1/8W,AA,TP,1.8X3.2MM	
R610	2001-000281	R-CARBON;100OHM,5%,1/8W,AA,TP,1.8X3.2MM	
R611	2001-000281	R-CARBON;100OHM,5%,1/8W,AA,TP,1.8X3.2MM	
R613	2007-000078	R-CHIP;1Kohm,5%,1/10W,TP,1608	
R614	2001-000429	R-CARBON;1KOHM,5%,1/8W,AA,TP,1.8X3.2MM	
R615	2001-000429	R-CARBON;1KOHM,5%,1/8W,AA,TP,1.8X3.2MM	
R617	2001-000864	R-CARBON;56KOHM,5%,1/8W,AA,TP,1.8X3.2MM	
R620	2007-000090	R-CHIP;10Kohm,5%,1/10W,TP,1608	
R622	2007-000090	R-CHIP;10Kohm,5%,1/10W,TP,1608	
R630	2007-000090	R-CHIP;10Kohm,5%,1/10W,TP,1608	
R631	2007-000078	R-CHIP;1Kohm,5%,1/10W,TP,1608	
R632	2001-000429	R-CARBON;1KOHM,5%,1/8W,AA,TP,1.8X3.2MM	
R633	2001-000429	R-CARBON;1KOHM,5%,1/8W,AA,TP,1.8X3.2MM	
R634	2007-000084	R-CHIP;4.7Kohm,5%,1/10W,TP,1608	
R635	2007-000084	R-CHIP;4.7Kohm,5%,1/10W,TP,1608	
R636	2001-000281	R-CARBON;100OHM,5%,1/8W,AA,TP,1.8X3.2MM	
R640	2007-000090	R-CHIP;10Kohm,5%,1/10W,TP,1608	
R641	2001-000780	R-CARBON;470OHM,5%,1/8W,AA,TP,1.8X3.2MM	
R642	2001-000780	R-CARBON;470OHM,5%,1/8W,AA,TP,1.8X3.2MM	
R644	2007-000078	R-CHIP;1Kohm,5%,1/10W,TP,1608	
R647	2001-000429	R-CARBON;1KOHM,5%,1/8W,AA,TP,1.8X3.2MM	

R651	2001-000010	R-CARBON;68KOHM,5%,1/8W,AA,TP,1.8X3.2MM	
R652	2001-000568	R-CARBON;27OHM,5%,1/8W,AA,TP,1.8X3.2MM	
R657	2007-000100	R-CHIP;68Kohm,5%,1/10W,TP,1608	
R660	2001-000786	R-CARBON;47KOHM,5%,1/8W,AA,TP,1.8X3.2MM	
R661	2001-000660	R-CARBON;33KOHM,5%,1/8W,AA,TP,1.8X3.2MM	
R666	2007-000084	R-CHIP;4.7Kohm,5%,1/10W,TP,1608	
R667	2007-000084	R-CHIP;4.7Kohm,5%,1/10W,TP,1608	
R668	2001-000780	R-CARBON;470OHM,5%,1/8W,AA,TP,1.8X3.2MM	
R669	2001-000780	R-CARBON;470OHM,5%,1/8W,AA,TP,1.8X3.2MM	
R670	2001-000734	R-CARBON;4.7KOHM,5%,1/8W,AA,TP,1.8X3.2M	
R671	2001-000734	R-CARBON;4.7KOHM,5%,1/8W,AA,TP,1.8X3.2M	
R672	2001-000734	R-CARBON;4.7KOHM,5%,1/8W,AA,TP,1.8X3.2M	
R673	2001-000429	R-CARBON;1KOHM,5%,1/8W,AA,TP,1.8X3.2MM	
R674	2007-000090	R-CHIP;10Kohm,5%,1/10W,TP,1608	
R675	2001-000032	R-CARBON;180OHM,5%,1/4W,AA,TP,2.4X6.4MM	
R676	2001-000633	R-CARBON;30KOHM,5%,1/8W,AA,TP,1.8X3.2MM	
R678	2007-000094	R-CHIP;22Kohm,5%,1/10W,TP,1608	
R679	2007-000075	R-CHIP;220ohm,5%,1/10W,TP,1608	
R682	2007-000094	R-CHIP;22Kohm,5%,1/10W,TP,1608	
R685	2001-000812	R-CARBON;5.6KOHM,5%,1/8W,AA,TP,1.8X3.2M	
R688	2007-000655	R-CHIP;27Kohm,5%,1/10W,TP,1608	
R691	2007-000075	R-CHIP;220ohm,5%,1/10W,TP,1608	
R693	2007-000097	R-CHIP;47Kohm,5%,1/10W,TP,1608	
R694	2007-000097	R-CHIP;47Kohm,5%,1/10W,TP,1608	
R698	2001-000290	R-CARBON;10KOHM,5%,1/8W,AA,TP,1.8X3.2MM	
S602	0603-001134	PHOTO TR;-,30V,4V,50mA,75mW,TRAY	
SW601	AC34-00005A	SWITCH MODE;-,-,-,-,-,-,-,-,-,-,-,-,-,-,	
SW602	AC34-00006A	SWITCH-REC;-,-,-,-,-,-,-,-,-,-,-,-,-,-,-	
W668	2007-000070	R-CHIP;0ohm,5%,1/10W,TP,1608	DVD-V340/FES Only
XT601	2801-003318	CRYSTAL-UNIT;32.768KHz,20ppm,28-AAP,12.5	
XT602	2801-003139	CRYSTAL-UNIT;8MHz,50ppm,28-AAA,22pF,80oh	

AUDIO/VIDEO PARTS

C315	2203-000975	C-CER,CHIP;47nF,10%,25V,X7R,TP,1608,-	
C317	2401-000586	C-AL;1uF,20%,50V,GP,TP,3x5,2.5	
C318	2401-000588	C-AL;1uF,20%,50V,GP,TP,3x5,2.5	
C319	2203-000843	C-CER,CHIP;39nF,10%,25V,X7R,TP,1608,-	
C320	2203-000975	C-CER,CHIP;47nF,10%,25V,X7R,TP,1608,-	
C321	2203-002398	C-CER,CHIP;22nF,10%,50V,X7R,TP,1608	
C322	2401-000588	C-AL;1uF,20%,50V,GP,TP,3x5,2.5	
C324	2203-000257	C-CER,CHIP;10nF,10%,50V,X7R,TP,1608	
C325	2401-001502	C-AL;47uF,20%,16V,GP,TP,6.3x5,2.5	
C326	2401-000588	C-AL;1uF,20%,50V,GP,TP,3x5,2.5	
C327	2203-001211	C-CER,CHIP;8.2nF,10%,50V,X7R,TP,1608,-	
C328	2203-000257	C-CER,CHIP;10nF,10%,50V,X7R,TP,1608	
C329	2203-005148	C-CER,CHIP;100nF,10%,16V,X7R,TP,1608	
C330	2203-000975	C-CER,CHIP;47nF,10%,25V,X7R,TP,1608,-	
C331	2203-005148	C-CER,CHIP;100nF,10%,16V,X7R,TP,1608	
C332	2203-000975	C-CER,CHIP;47nF,10%,25V,X7R,TP,1608,-	
C333	2401-000408	C-AL;10uF,20%,16V,GP,TP,3.5x5,2.5	
C334	2203-000975	C-CER,CHIP;47nF,10%,25V,X7R,TP,1608,-	
C334A	2203-000236	C-CER,CHIP;0.1NF,5%,50V,C0G,TP,1608	
C335	2203-001652	C-CER,CHIP;470nF,+80-20%,16V,Y5V,TP,1608	
C337	2203-001652	C-CER,CHIP;470nF,+80-20%,16V,Y5V,TP,1608	
C338	2203-000609	C-CER,CHIP;22nF,10%,50V,X7R,TP,2012	
C339	2401-000408	C-AL;10uF,20%,16V,GP,TP,3.5x5,2.5	
C340	2401-001226	C-AL;4.7uF,20%,16V,BP,TP,4x7,5mm	
C341	2401-003107	C-AL;47uF,20%,16V,GP,TP,5x7.5	
C342	2202-002037	C-CERAMIC,MLC-AXIAL;100nF,80-20%,50V,Y5V	
C343	2203-005065	C-CER,CHIP;1000nF,+80-20%,10V,Y5V,-,1608	
C344	2203-000315	C-CER,CHIP;0.12NF,5%,50V,C0G,TP,1608	
C345	2203-001607	C-CER,CHIP;0.22nF,5%,50V,NP0,-,1608	
[illegible]	[illegible]	C-CER,CHIP;1000nF,+80-20%,10V,Y5V,-,1608	
C348	2203-005148	C-CER,CHIP;100nF,10%,16V,X7R,TP,1608	
C349	2203-005065	C-CER,CHIP;1000nF,+80-20%,10V,Y5V,-,1608	
C350	2203-005148	C-CER,CHIP;100nF,10%,16V,X7R,TP,1608	
C351	2401-003107	C-AL;47uF,20%,16V,GP,TP,5x7.5	
C352	2401-000588	C-AL;1uF,20%,50V,GP,TP,3x5,2.5	
C353	2401-000588	C-AL;1uF,20%,50V,GP,TP,3x5,2.5	
C354	2401-001502	C-AL;47uF,20%,16V,GP,TP,6.3x5,2.5	
C355	2203-000975	C-CER,CHIP;47nF,10%,25V,X7R,TP,1608,-	
C355A	2203-000236	C-CER,CHIP;0.1NF,5%,50V,C0G,TP,1608	
C380	2203-002398	C-CER,CHIP;22nF,10%,50V,X7R,TP,1608	
C3A01	2401-003122	C-AL;4.7uF,20%,50V,LL,TP,5X7.5	
C3A02	2401-000922	C-AL;22uF,20%,16V,GP,TP,5x5.5	
C3A08	2203-000257	C-CER,CHIP;10nF,10%,50V,X7R,TP,1608	
C3A09	2203-001103	C-CER,CHIP;6.8nF,10%,50V,X7R,TP,1608,-	
C3A10	2203-001211	C-CER,CHIP;8.2nF,10%,50V,X7R,TP,1608,-	
C3A11	2301-000174	C-FILM,LEAD-PEF;15nF,5%,100V,TP,7.2x4.0x	
C3A12	2401-002095	C-AL;47uF,20%,25V,GP,TP,6.3x5.5	
C3A14	2202-000263	C-CERAMIC,MLC-AXIAL;470pF,10%,50V,Y5P,TP	
C3A15	2203-000257	C-CER,CHIP;10nF,10%,50V,X7R,TP,1608	
C3A16	2401-003122	C-AL;4.7uF,20%,50V,LL,TP,5X7.5	
C3A17	2401-000414	C-AL;10uF,20%,16V,GP,TP,4x7.5	
C3A18	2203-001126	C-CER,CHIP;0.68nF,10%,50V,X7R,TP,1608	
C3A21A	2203-001554	C-CER,CHIP;1.8nF,10%,50V,X7R,TP,1608	
C3A22	2203-005148	C-CER,CHIP;100nF,10%,16V,X7R,TP,1608	
C3A23	2401-002069	C-AL;33uF,20%,16V,GP,TP,6.3x5.5	
C3A24	2203-005148	C-CER,CHIP;100nF,10%,16V,X7R,TP,1608	
C3A29	2203-005148	C-CER,CHIP;100nF,10%,16V,X7R,TP,1608	
C3A30	2401-001502	C-AL;47uF,20%,16V,GP,TP,6.3x5,2.5	
C3A40	2401-000414	C-AL;10uF,20%,16V,GP,TP,4x7.5	
C3A41	2401-000588	C-AL;1uF,20%,50V,GP,TP,3x5,2.5	
C3A70	2203-001126	C-CER,CHIP;0.68nF,10%,50V,X7R,TP,1608	
C3A71	2203-005148	C-CER,CHIP;100nF,10%,16V,X7R,TP,1608	
C301	2203-000257	C-CER,CHIP;10nF,10%,50V,X7R,TP,1608	
C302	2202-000243	C-CERAMIC,MLC-AXIAL;33pF,5%,50V,SL,TP,3.	
C303	2203-001086	C-CER,CHIP;0.005nF,0.25pF,50V,NP0,TP,160	
C304	2203-000257	C-CER,CHIP;10nF,10%,50V,X7R,TP,1608	
CN301	3706-000394	CONNECTOR-FPC/FFC/PIC;6P,1.25MM,STRAIGHT	
CN3A01	3708-001165	CONNECTOR-FPC/FFC/PIC;6P,1.25MM,STRAIGHT	
CN3A02	AC37-00028A	CONNECTOR-SOCKET;-,X-11,T3.0,W6.5,PBT NT	
CN3A1S	3809-001206	CABLE-FLAT;30V,-20to+80C,140mm,6P,1.25mm	
D301	0401-000101	DIODE-SWITCHING;1N4148,75V,150MA,DO-35,T	
D302	0402-000127	DIODE-RECTIFIER;1N4002,100V,1A,DO-41,TP	
FL3A01	2702-000166	INDUCTOR-RADIAL;47uH,5%,6.0x6.4mm	
IC301	1204-002140	IC-VIDEO PROCESS;LA71750EM-MPB-E,QFP,100	
L301	2701-000002	INDUCTOR-AXIAL;100UH,10%,4298	
L301A	2701-000002	INDUCTOR-AXIAL;100UH,10%,4298	
L302	2701-000002	INDUCTOR-AXIAL;100UH,10%,4298	
L303	2701-000002	INDUCTOR-AXIAL;100UH,10%,4298	
L304	3301-000297	BEAD-AXIAL;25ohm,3.6x1.2x6.7mm,TP,_	
L370	2701-000113	INDUCTOR-AXIAL;100UH,5%,2534	
L3A01	2702-000120	INDUCTOR-RADIAL;15000uH,5%,6.2x7.4mm	
L3A02	2701-000002	INDUCTOR-AXIAL;100UH,10%,4298	
L3A03	2701-000002	INDUCTOR-AXIAL;100UH,10%,4298	
L3A70	2702-000120	INDUCTOR-RADIAL;15000uH,5%,6.2x7.4mm	
L3Q1	2701-000206	INDUCTOR-AXIAL;56uH,5%,2434	
L3Q2	2701-000131	INDUCTOR-AXIAL;15uH,5%,2534	
Q302	0501-000341	TR-SMALL SIGNAL;KSC1623-L,NPN	DVD-V340/AFR Only
Q351	0501-000002	TR-SMALL SIGNAL;KSA812,PNP,150MW,SOT-23,	
Q3A01	0501-000396	TR-SMALL SIGNAL;KSC945,NPN,250mW,TO-92,T	
Q3A02	0501-000303	TR-SMALL SIGNAL;KSA733,PNP,250mW,TO-92,T	
Q3A03	0501-000442	TR-SMALL SIGNAL;KTC3203-Y,NPN,400mW,TO-9	
Q3A04	0501-000442	TR-SMALL SIGNAL;KTC3203-Y,NPN,400mW,TO-9	
Q3A05	0501-000442	TR-SMALL SIGNAL;KTC3203-Y,NPN,400mW,TO-9	
Q3A06	0501-000303	TR-SMALL SIGNAL;KSA733,PNP,250mW,TO-92,T	
Q3Q1	0501-000002	TR-SMALL SIGNAL;KSA812,PNP,150MW,SOT-23,	DVD-V340/FES Only
	0501-000341	TR-SMALL SIGNAL;KSC1623-L,NPN	DVD-V340/AFR Only
Q3Q2	0501-000002	TR-SMALL SIGNAL;KSA812,PNP,150MW,SOT-23,	DVD-V340/FES Only
	0501-000341	TR-SMALL SIGNAL;KSC1623-L,NPN	DVD-V340/AFR Only
Q3Q3	0501-000002	TR-SMALL SIGNAL;KSA812,PNP,150MW,SOT-23,	DVD-V340/FES Only

	0501-000341	TR-SMALL SIGNAL;KSC1623-L,NPN	DVD-V340/AFR Only
Q3Q4	0501-000002	TR-SMALL SIGNAL;KSA812,PNP,150MW,SOT-23,	DVD-V340/FES Only
	0501-000341	TR-SMALL SIGNAL;KSC1623-L,NPN	DVD-V340/AFR Only
Q3Q5	0504-000152	TR-DIGITAL;KSR2101,PNP,200mW,4.7K/4.7K,S	
Q3Q6	0504-000129	TR-DIGITAL;KSR1104,NPN,200mW,47K/47K,SOT	
Q3Q7	0501-000002	TR-SMALL SIGNAL;KSA812,PNP,150MW,SOT-23,	DVD-V340/FES Only
	0501-000341	TR-SMALL SIGNAL;KSC1623-L,NPN	DVD-V340/AFR Only
R315	2007-000122	R-CHIP;1.2Kohm,5%,1/10W,TP,1608	
R316	2007-001179	R-CHIP;8.2Kohm,5%,1/10W,TP,1608	
R320	2007-000458	R-CHIP;18Kohm,5%,1/10W,TP,1608	
R321	2007-000090	R-CHIP;10Kohm,5%,1/10W,TP,1608	
R322	2007-000456	R-CHIP;18Kohm,5%,1/10W,TP,1608	
R323	2007-000125	R-CHIP;3.9Kohm,5%,1/10W,TP,1608	
R324	2007-000079	R-CHIP;1.8Kohm,5%,1/10W,TP,16	DVD-V340/AFR Only
R325	2001-000281	R-CARBON;100OHM,5%,1/8W,AA,TP,1.8X3.2MM	
R326	2001-000281	R-CARBON;100OHM,5%,1/8W,AA,TP,1.8X3.2MM	
R327	2007-000084	R-CHIP;4.7Kohm,5%,1/10W,TP,1608	
R328	2007-000122	R-CHIP;1.2Kohm,5%,1/10W,TP,1608	
R329	2007-000081	R-CHIP;2.7Kohm,5%,1/10W,TP,1608	
R330	2007-000087	R-CHIP;6.8Kohm,5%,1/10W,TP,1608	
R331	2007-000079	R-CHIP;1.8Kohm,5%,1/10W,TP,1608	
R333	2007-001039	R-CHIP;56Kohm,5%,1/8W,TP,2012	
R334	2007-000123	R-CHIP;1.5Kohm,5%,1/10W,TP,1608	
R335	2001-000281	R-CARBON;100OHM,5%,1/8W,AA,TP,1.8X3.2MM	
R350	2007-000123	R-CHIP;1.5Kohm,5%,1/10W,TP,16	DVD-V340/AFR Only
R360	2007-001196	R-CHIP;820Kohm,5%,1/10W,TP,1608	
R372	2007-000078	R-CHIP;1Kohm,5%,1/10W,TP,1608	
R373	2007-000093	R-CHIP;20Kohm,5%,1/10W,TP,1608	
R380	2007-000124	R-CHIP;2.2Kohm,5%,1/10W,TP,1608	
R3A01	2007-000090	R-CHIP;10Kohm,5%,1/10W,TP,1608	
R3A04	2001-000221	R-CARBON;1.2KOHM,5%,1/8W,AA,TP,1.8X3.2M	
R3A05	2007-000616	R-CHIP;24Kohm,5%,1/10W,TP,1608	
R3A06	2007-000539	R-CHIP;200ohm,5%,1/10W,TP,1608	
R3A07	2007-000133	R-CHIP;330Kohm,5%,1/10W,TP,1608	
R3A08	2007-000091	R-CHIP;12Kohm,5%,1/10W,TP,1608	
R3A09	2007-000070	R-CHIP;0ohm,5%,1/10W,TP,1608	
R3A11	2007-000124	R-CHIP;2.2Kohm,5%,1/10W,TP,1608	
R3A12	2007-000074	R-CHIP;100ohm,5%,1/10W,TP,1608	
R3A13	2007-000097	R-CHIP;47Kohm,5%,1/10W,TP,1608	
R3A14	2007-000094	R-CHIP;22Kohm,5%,1/10W,TP,1608	
R3A16	2007-000090	R-CHIP;10Kohm,5%,1/10W,TP,1608	
R3A17	2007-000124	R-CHIP;2.2Kohm,5%,1/10W,TP,1608	
R3A18	2007-000124	R-CHIP;2.2Kohm,5%,1/10W,TP,1608	
R3A23	2007-000091	R-CHIP;12Kohm,5%,1/10W,TP,1608	
R3A24	2007-000094	R-CHIP;22Kohm,5%,1/10W,TP,1608	
R3A25	2001-000221	R-CARBON;1.2KOHM,5%,1/8W,AA,TP,1.8X3.2M	
R3A26	2007-000090	R-CHIP;10Kohm,5%,1/10W,TP,1608	
R3A27	2007-001056	R-CHIP;6.2Kohm,5%,1/10W,TP,1608	
R3A28	2007-000124	R-CHIP;2.2Kohm,5%,1/10W,TP,1608	
R3A32	2007-000913	R-CHIP;43Kohm,5%,1/10W,TP,1608	
R3A50	2001-000800	R-CARBON;5.1KOHM,5%,1/8W,AA,TP,1.8X3.2M	
R3A51	2007-000090	R-CHIP;10Kohm,5%,1/10W,TP,1608	
R3A60	2007-000704	R-CHIP;3.6Kohm,5%,1/10W,TP,1608	
R3A70	2007-000084	R-CHIP;4.7Kohm,5%,1/10W,TP,1608	
R3Q1	2007-000122	R-CHIP;1.2Kohm,5%,1/10W,TP,1608	
R3Q12	2001-000006	R-CARBON;15KOHM,5%,1/8W,AA,TP,1.8X3.2MM	
R3Q2	2007-000090	R-CHIP;10Kohm,5%,1/10W,TP,1608	
R3Q3	2007-000076	R-CHIP;330ohm,5%,1/10W,TP,1608	
R3Q4	2007-001056	R-CHIP;6.2Kohm,5%,1/10W,TP,1608	
R3Q5	2007-000076	R-CHIP;330ohm,5%,1/10W,TP,1608	
R3Q6	2001-000252	R-CARBON;1.6KOHM,5%,1/8W,AA,TP,1.8X3.2M	
R3Q7	2001-000097	R-CARBON;3KOHM,5%,1/8W,AA,TP,1.8X3.2MM	
R3Q8	2007-000076	R-CHIP;330ohm,5%,1/10W,TP,1608	
R3Q9	2001-000958	R-CARBON;750OHM,5%,1/8W,AA,TP,1.8X3.2MM	
W177	2001-000429	R-CARBON;1KOHM,5%,1/8W,AA,TP,1.8X3.2MM	
W178	2001-000429	R-CARBON;1KOHM,5%,1/8W,AA,TP,1.8X3.2MM	
W205	2001-000281	R-CARBON;100OHM,5%,1/8W,AA,TP,1.8X3.2MM	
W206	2001-000281	R-CARBON;100OHM,5%,1/8W,AA,TP,1.8X3.2MM	
W311	2701-000002	INDUCTOR-AXIAL;100UH,10%,4298	
XT301	2801-001397	CRYSTAL-UNIT;4.433619MHz,20ppm,28-AAA,S,	

TM-BLOCK PARTS

C401	2401-003107	C-AL;47uF,20%,16V,GP,TP,5x7.5	
C402	2203-002398	C-CER,CHIP;22nF,10%,50V,X7R,TP,1608	
C403	2401-001502	C-AL;47uF,20%,16V,GP,TP,6.3x5,2.5	
C404	2401-001077	C-AL;330nF,20%,50V,GP,TP,4x7mm,5mm	
C405	2401-002438	C-AL;47uF,20%,50V,WT,TP,6.3x11,5	
C406	2203-000257	C-CER,CHIP;10nF,10%,50V,X7R,TP,1608	
C407	2401-003107	C-AL;47uF,20%,16V,GP,TP,5x7.5	
C409	2401-002299	C-AL;4.7uF,20%,50V,GP,TP,5x7.5	
C410	2203-000257	C-CER,CHIP;10nF,10%,50V,X7R,TP,1608	
D401	0402-000127	DIODE-RECTIFIER;1N4002,100V,1A,DO-41,TP	
L401	AC27-12001N	COIL CHOKE;10UH-15%,RA,K-30,Q80,150KHZ,-	
Q401	0501-000002	TR-SMALL SIGNAL;KSA812,PNP,150MW,SOT-23,	
R401	2001-000786	R-CARBON;47KOHM,5%,1/8W,AA,TP,1.8X3.2MM	
R402	2001-000281	R-CARBON;100OHM,5%,1/8W,AA,TP,1.8X3.2MM	
R403	2001-000281	R-CARBON;100OHM,5%,1/8W,AA,TP,1.8X3.2MM	
R404	2001-000281	R-CARBON;100OHM,5%,1/8W,AA,TP,1.8X3.2MM	
R406	2007-001010	R-CHIP;51Kohm,5%,1/10W,TP,1608	
R408	2007-000122	R-CHIP;1.2Kohm,5%,1/10W,TP,1608	
R440	2001-000362	R-CARBON;150OHM,5%,1/8W,AA,TP,1.8X3.2MM	
R441	2007-000116	R-CHIP;120ohm,5%,1/10W,TP,1608	
TM401	AC40-00029A	TM BLOCK;TCMK0601PD20A,PAL B/G + I + D/	
W404	2001-000780	R-CARBON;470OHM,5%,1/8W,AA,TP,1.8X3.2MM	
ZD401	0403-000390	DIODE-ZENER;UZP33B,31.4-34.6V,1000MW,DO-	

SECAM PARTS

C3S01	2203-000257	C-CER,CHIP;10nF,10%,50V,X7R,T	DVD-V340/AFR Only
C3S02	2401-000598	C-AL;1uF,20%,50V,GP,TP,4x7.5	DVD-V340/AFR Only
C3S03	2203-000257	C-CER,CHIP;10nF,10%,50V,X7R,T	DVD-V340/AFR Only
C3S04	2401-000598	C-AL;1uF,20%,50V,GP,TP,4x7.5	DVD-V340/AFR Only
C3S05	2203-005148	C-CER,CHIP;100nF,10%,16V,X7R,	DVD-V340/AFR Only
C3S06	2401-001324	C-AL;0.47UF,20%,50V,GP,BK,3X5	DVD-V340/AFR Only
C3S07	2007-000070	R-CHIP;0ohm,5%,1/10W,TP,1608	DVD-V340/AFR Only
C3S08	2203-005148	C-CER,CHIP;100nF,10%,16V,X7R,	DVD-V340/AFR Only
C3S09	2401-001324	C-AL;0.47UF,20%,50V,GP,BK,3X5	DVD-V340/AFR Only
C3S10	2401-003107	C-AL;47uF,20%,16V,GP,TP,5x7.5	DVD-V340/AFR Only
C3S11	2203-005148	C-CER,CHIP;100nF,10%,16V,X7R,	DVD-V340/AFR Only
C3S12A	2203-000440	C-CER,CHIP;1nF,10%,50V,X7R,TP	DVD-V340/AFR Only
C3S12B	2203-000440	C-CER,CHIP;1nF,10%,50V,X7R,TP	DVD-V340/AFR Only
C3S14	2401-000665	C-AL;2.2uF,20%,50V,GP,TP,3.5x	DVD-V340/AFR Only
C3S14A	2203-000440	C-CER,CHIP;1nF,10%,50V,X7R,TP	DVD-V340/AFR Only
C3S14B	2203-000440	C-CER,CHIP;1nF,10%,50V,X7R,TP	DVD-V340/AFR Only
C3S15	2203-000440	C-CER,CHIP;1nF,10%,50V,X7R,TP	DVD-V340/AFR Only
IC3S01	1204-001921	IC-CHROMA;LA70100M,SOP,30P,37	DVD-V340/AFR Only
R3S01	2007-000078	R-CHIP;1Kohm,5%,1/10W,TP,1608	DVD-V340/AFR Only
R3S02	2001-000435	R-CARBON;1MOHM,5%,1/8W,AA,TP,	DVD-V340/AFR Only

OSD/VPS/PDC PARTS

C6P01	2203-000257	C-CER,CHIP;10nF,10%,50V,X7R,TP,1608	
C6P02	2203-000315	C-CER,CHIP;0.12NF,5%,50V,C0G,TP,1608	
C6P04	2203-000681	C-CER,CHIP;0.027NF,5%,50V,C0G,TP,1608	
C6P05	2203-000681	C-CER,CHIP;0.027NF,5%,50V,C0G,TP,1608	
C6P08	2203-001071	C-CER,CHIP;0.056NF,5%,50V,C0G,TP,1608	
C6P10	2401-000596	C-AL;1uF,20%,50V,GP,TP,4x7.5	
C6P11	2401-000596	C-AL;1uF,20%,50V,GP,TP,4x7.5	
C6P12	2401-002165	C-AL;100uF,20%,16V,GP,TP,6.3x7.5	
C6P13	2203-005148	C-CER,CHIP;100nF,10%,16V,X7R,TP,1608	
C6P15	2203-001140	C-CER,CHIP;68nF,10%,16V,X7R,TP,1608	
D6P01	0401-000101	DIODE-SWITCHING;1N4148,75V,150MA,DO-35,T	
IC6P01	1204-001796	IC-OSD PROCESSOR;LC74759JM-9820,MFP,24P,	
L6P01	2701-000002	INDUCTOR-AXIAL;100UH,10%,4298	

L6P03	2701-000160	INDUCTOR-AXIAL;22uH,5%,2434	
L6P05	2701-000165	INDUCTOR-AXIAL;27uH,5%,2434	
Q6P01	0501-000303	TR-SMALL SIGNAL;KSA733,PNP;250mW,TO-92,T	
Q6P02	0501-000303	TR-SMALL SIGNAL;KSA733,PNP;250mW,TO-92,T	
Q6P04	0501-000398	TR-SMALL SIGNAL;KSC945,NPN,250mW,TO-92,T	
R6P05	2007-000090	R-CHIP;10Kohm,5%,1/10W,TP,1608	
R6P07	2007-000075	R-CHIP;220ohm,5%,1/10W,TP,1608	
R6P08	2301-000005	R-CARBON;390ohm,5%,1/8W,AA,TP,1.9x3.2mm	
R6P09	2007-000124	R-CHIP;2.2Kohm,5%,1/10W,TP,1608	
R6P10	2001-000515	R-CARBON;2200HM,5%,1/8W,AA,TP,1.8X3.2MM	
R6P12	2001-000734	R-CARBON;4.7KOHM,5%,1/8W,AA,TP,1.8X3.2M	
R6P13	2007-000097	R-CHIP;47Kohm,5%,1/10W,TP,1608	
R6P14	2007-000123	R-CHIP;1.5Kohm,5%,1/10W,TP,1608	
INPUT-OUTPUT PARTS			
C812	2401-000922	C-AL;22uF,20%,16V,GP,TP,5x5,5	
C813	2401-000922	C-AL;22uF,20%,16V,GP,TP,5x5,5	
C814	2401-000922	C-AL;22uF,20%,16V,GP,TP,5x5,5	
C815	2401-000922	C-AL;22uF,20%,16V,GP,TP,5x5,5	
C816	2401-002165	C-AL;100uF,20%,16V,GP,TP,6.3x7,5	
C817	2203-000257	C-CER,CHIP;10nF,10%,50V,X7R,TP,1608	
C818	2203-000783	C-CER,CHIP;0.33NF,5%,50V,C0G,TP,1608	
C821	2203-000783	C-CER,CHIP;0.33NF,5%,50V,C0G,TP,1608	
C822A	2203-000236	C-CER,CHIP;0.1NF,5%,50V,C0G,TP,1608	
C835	2401-001479	C-AL;470UF,20%,10V,GP,TP,6.3*11MM,-	
C837	2203-000257	C-CER,CHIP;10nF,10%,50V,X7R,TP,1608	
C840	2203-005148	C-CER,CHIP;100nF,10%,16V,X7R,TP,1608	
C851	2401-000922	C-AL;22uF,20%,16V,GP,TP,5x5,5	
C853	2203-000491	C-CER,CHIP;2.2nF,10%,50V,X7R,TP,1608,-	
C854	2203-000491	C-CER,CHIP;2.2nF,10%,50V,X7R,TP,1608,-	
C858	2401-000922	C-AL;22uF,20%,16V,GP,TP,5x5,5	
C890	2401-000922	C-AL;22uF,20%,16V,GP,TP,5x5,5	
D805	0401-000101	DIODE-SWITCHING;1N4148,75V,150MA,DO-35,T	
IC802	0801-002741	IC-CMOS LOGIC;BU4053BCPV,MUX,SSOP,16P,17	
J03C	2007-000076	R-CHIP;0ohm,5%,1/10W,TP,1608	
J330	2007-000070	R-CHIP;0ohm,5%,1/10W,TP,1608	
J50A	2007-000070	R-CHIP;0ohm,5%,1/10W,TP,1608	
J901B	2007-000070	R-CHIP;0ohm,5%,1/10W,TP,1608	
J902B	2007-000070	R-CHIP;0ohm,5%,1/10W,TP,1608	
J903B	2007-000070	R-CHIP;0ohm,5%,1/10W,TP,1608	
J905	2007-000070	R-CHIP;0ohm,5%,1/10W,TP,1608	
J910	2007-000029	R-CHIP;0ohm,5%,1/8W,TP,2012	
J911	2007-000029	R-CHIP;0ohm,5%,1/8W,TP,2012	
J912	2007-000070	R-CHIP;0ohm,5%,1/10W,TP,1608	
J914	2007-000029	R-CHIP;0ohm,5%,1/8W,TP,2012	
JC801	3722-001574	JACK-SCART;21P,-,SN,BLK,#20-28	
JC902	AC37-220029	JACK-PIN;3.2mm,DPAM-9837,2P(1),MONO,SV-	
L803	2701-000181	INDUCTOR-AXIAL;33uH,5%,2434	
L808	2701-000181	INDUCTOR-AXIAL;33uH,5%,2434	
L810	2701-000181	INDUCTOR-AXIAL;33uH,5%,2434	
L890	2701-000002	INDUCTOR-AXIAL;100UH,10%,4298	
Q802	0504-000119	TR-DIGITAL;KSR1004,NPN,300MW,47K/47K,TO-	
Q803	0504-000129	TR-DIGITAL;KSR1104,NPN,200mW,47K/47K,SOT	
Q804	0504-000142	TR-DIGITAL;KSR2001,PNP,300MW,4.7K/4.7K,T	
Q806	0504-000152	TR-DIGITAL;KSR2101,PNP,200mW,4.7K/4.7K,S	
Q808	0504-000119	TR-DIGITAL;KSR1004,NPN,300MW,47K/47K,TO-	
Q810	0501-000002	TR-SMALL SIGNAL;KSA812,PNP,150MW,SOT-23,	DVD-V340/FES Only
	0501-000341	TR-SMALL SIGNAL;KSC1623-L,NPN	DVD-V340/AFR Only
Q811	0501-000002	TR-SMALL SIGNAL;KSA812,PNP,150MW,SOT-23,	DVD-V340/FES Only
	0501-000341	TR-SMALL SIGNAL;KSC1623-L,NPN	DVD-V340/AFR Only
Q891A	0501-000398	TR-SMALL SIGNAL;KSC945,NPN,250mW,TO-92,T	
R801A	2007-000116	R-CHIP;120ohm,5%,1/10W,TP,1608	
R802	2007-000079	R-CHIP;1.8Kohm,5%,1/10W,TP,1608	
R803	2007-000079	R-CHIP;1.8Kohm,5%,1/10W,TP,1608	
R805	2007-000643	R-CHIP;270ohm,5%,1/10W,TP,1608	
R807	2007-001134	R-CHIP;68ohm,5%,1/10W,TP,1608	

R813	2007-000643	R-CHIP;270ohm,5%,1/10W,TP,1608	
R814	2007-000643	R-CHIP;270ohm,5%,1/10W,TP,1608	
R815	2007-000643	R-CHIP;270ohm,5%,1/10W,TP,1608	
R816	2007-000643	R-CHIP;270ohm,5%,1/10W,TP,1608	
R8228	2007-001167	R-CHIP;75ohm,5%,1/10W,TP,1608	
R825	2007-000084	R-CHIP;4.7Kohm,5%,1/10W,TP,1608	
R827	2007-000101	R-CHIP;82Kohm,5%,1/10W,TP,1608	
R828	2007-000101	R-CHIP;82Kohm,5%,1/10W,TP,1608	
R829	2007-000101	R-CHIP;82Kohm,5%,1/10W,TP,1608	
R830	2007-000101	R-CHIP;82Kohm,5%,1/10W,TP,1608	
R835	2007-000101	R-CHIP;82Kohm,5%,1/10W,TP,1608	
R836	2007-000101	R-CHIP;82Kohm,5%,1/10W,TP,1608	
R842	2007-000119	R-CHIP;560ohm,5%,1/10W,TP,1608	
R843	2007-000119	R-CHIP;560ohm,5%,1/10W,TP,1608	
R844	2007-001167	R-CHIP;75ohm,5%,1/10W,TP,1608	
R852	2007-000097	R-CHIP;47Kohm,5%,1/10W,TP,1608	
R891A	2007-000090	R-CHIP;10Kohm,5%,1/10W,TP,1608	
R892A	2007-001179	R-CHIP;8.2Kohm,5%,1/10W,TP,1608	
R893A	2007-000122	R-CHIP;1.2Kohm,5%,1/10W,TP,1608	
R894A	2007-000655	R-CHIP;27Kohm,5%,1/10W,TP,1608	
ZD801	0403-000297	DIODE-ZENER;MTZ6.2B,5.96-6.27V,500MW,DO-	
ZD805	0403-001211	DIODE-ZENER;MTZJ12B,11.8-12.3V,500MW,DO-	
ZD806	0403-001093	DIODE-ZENER;UDZ9.1B,8.85-9.23V,200MW,UMD	
ZD807	0403-001093	DIODE-ZENER;UDZ9.1B,8.85-9.23V,200MW,UMD	
ZD811	0403-000720	DIODE-ZENER;MTZJ9.1B,8.57-9.01V,500MW,DO	
ZD853	0403-000720	DIODE-ZENER;MTZJ9.1B,8.57-9.01V,500MW,DO	
ZD854	0403-000720	DIODE-ZENER;MTZJ9.1B,8.57-9.01V,500MW,DO	
ZD863	0403-001093	DIODE-ZENER;UDZ9.1B,8.85-9.23V,200MW,UMD	
DISPLAY/FUNCTION MATRIX PARTS			
BD701	3301-001419	BEAD-SMD;-,220,-,500,TP,-,0.3	
BD702	3301-001419	BEAD-SMD;-,220,-,500,TP,-,0.3	
BD703	3301-001419	BEAD-SMD;-,220,-,500,TP,-,0.3	
C701	2401-002165	C-AL;100uF,20%,16V,GP,TP,6.3x7,5	
C702	2203-000257	C-CER,CHIP;10nF,10%,50V,X7R,TP,1608	
C703	2203-000440	C-CER,CHIP;1nF,10%,50V,X7R,TP,1608,-	
C706	2203-000239	C-CER,CHIP;0.1NF,5%,50V,C0G,TP,2012	
C707	2401-001992	C-AL;2200UF,20%,10V,WT,TP,10X20MM,5	
C708A	2203-000257	C-CER,CHIP;10nF,10%,50V,X7R,TP,1608	
C712	2203-000491	C-CER,CHIP;2.2nF,10%,50V,X7R,TP,1608,-	
C714	2203-000491	C-CER,CHIP;2.2nF,10%,50V,X7R,TP,1608,-	
CN701	3710-001918	CONNECTOR-SOCKET;6P,1R,2MM,ANGLE,SN	
CN701A	3711-005312	CONNECTOR-HEADER,3WALL,6P,1R,2MM,STRAIGH	
D701	0401-000101	DIODE-SWITCHING;1N4148,75V,150MA,DO-35,T	
D702	0401-000101	DIODE-SWITCHING;1N4148,75V,150MA,DO-35,T	
D703	0401-000101	DIODE-SWITCHING;1N4148,75V,150MA,DO-35,T	
D704	0401-000101	DIODE-SWITCHING;1N4148,75V,150MA,DO-35,T	
D705	0401-000101	DIODE-SWITCHING;1N4148,75V,150MA,DO-35,T	
DT701	AC07-00069A	LED DISPLAY;BCD-9027E,SV-DVD440,5-DIGIT,	
IC701	1003-001561	IC-LED DRIVER;PT6961,SOP,32P,300MIL,-,40	
JK701	3722-002170	JACK-PIN;2P,Ni,WHT/YEL,ANGLE	
L701	2701-000002	INDUCTOR-AXIAL;100UH,10%,4298	
L702	2701-000002	INDUCTOR-AXIAL;100UH,10%,4298	
R701	2001-000429	R-CARBON;1KOHM,5%,1/8W,AA,TP,1.8X3.2MM	
R702	2007-000078	R-CHIP;1Kohm,5%,1/10W,TP,1608	
R703	2007-000078	R-CHIP;1Kohm,5%,1/10W,TP,1608	
R704	2001-000837	R-CARBON;51KOHM,5%,1/8W,AA,TP,1.8X3.2MM	
R711	2007-000090	R-CHIP;10Kohm,5%,1/10W,TP,1608	
R712	2007-001167	R-CHIP;75ohm,5%,1/10W,TP,1608	
RM701	AC32-00006A	MODULE REMOCON;TSOP2238WE1,38KHZ,-,5.08m	
SW701	3404-001182	SWITCH-TACT;DC12V,50MA,100GF,6.0X6.0X5.0	
SW702	3404-001182	SWITCH-TACT;DC12V,50MA,100GF,6.0X6.0X5.0	
SW703	3404-001182	SWITCH-TACT;DC12V,50MA,100GF,6.0X6.0X5.0	
SW704	3404-001182	SWITCH-TACT;DC12V,50MA,100GF,6.0X6.0X5.0	
SW705	3404-001182	SWITCH-TACT;DC12V,50MA,100GF,6.0X6.0X5.0	
SW707	3404-001182	SWITCH-TACT;DC12V,50MA,160GF,6.0X6.0X5.0	

SW708	3404-001182	SWITCH-TACT;DC12V,50MA,100GF,6.0X6.0X5.0	
SW709	3404-001182	SWITCH-TACT;DC12V,50MA,100GF,6.0X6.0X5.0	
SW710	3404-001182	SWITCH-TACT;DC12V,50MA,100GF,6.0X6.0X5.0	
SW713	3404-001182	SWITCH-TACT;DC12V,50MA,100GF,6.0X6.0X5.0	
SW714	3404-001182	SWITCH-TACT;DC12V,50MA,100GF,6.0X6.0X5.0	
SW715	3404-001182	SWITCH-TACT;DC12V,50MA,100GF,6.0X6.0X5.0	
SW716	3404-001182	SWITCH-TACT;DC12V,50MA,100GF,6.0X6.0X5.0	
W735	2202-002037	C-CERAMIC,ML,C-AXIAL;100nF,80-20%,50V,Y5V	
ZD701	0403-000720	DIODE-ZENER;MTZJ9.1B,8.57-9.01V,500MW,DO	

681	**AC32-01553G**	**ASSY PCB-MAIN;SV-DVD440/FES,KAISER**	**DVD-V540/FES Only**
	AC32-01553F	**ASSY PCB-MAIN;SV-DVD440/AFR,KAISER**	**DVD-V540/AFR Only**
S.M.P.S. PARTS			
801S01	AC27-02001M	COIL-INDUCTOR;RH3.5X6.5RS,BEAD(RADIAL),-	
801S02	AC27-02001M	COIL-INDUCTOR;RH3.5X6.5RS,BEAD(RADIAL),-	
801SS3	AC27-02001M	COIL-INDUCTOR;RH3.5X6.5RS,BEAD(RADIAL),-	
C1SD12	2305-001029	C-FILM,LEAD-PEF;10nF,10%,630V,TP,12x9x12	
C1SD13	2301-000383	C-FILM,LEAD-PEF;10nF,5%,50V,TP,6x7x3.2mm	
C1SD16	2201-000129	C-CERAMIC,DISC;0.1NF,10%,1KV,Y5P,TP,7X4M	
C1SF02	2401-002508	C-AL;33uF,20%,,35V,GP,TP,5x11,5	
C1SS01	2301-001157	C-FILM,LEAD-PEF;47nF,10%,275V,BK,17.5x12	⚠
C1SS02	2301-001157	C-FILM,LEAD-PEF;47nF,10%,275V,BK,17.5x12	⚠
C1SS03	2201-002044	C-CERAMIC,DISC;0.1NF,10%,400V,Y5P,TP,9.5	⚠
C1SS05	2201-002044	C-CERAMIC,DISC;0.1NF,10%,400V,Y5P,TP,9.5	⚠
C1SS06	2201-002044	C-CERAMIC,DISC;0.1NF,10%,400V,Y5P,TP,9.5	⚠
C1SS10	2401-003303	C-AL;82uF,20%,400V,GP,BK,22X30,10	
C1SS11	2401-000598	C-AL;1uF,20%,,50V,GP,TP,4x7,5	
C1SS12	2401-002299	C-AL;4.7uF,20%,,50V,GP,TP,5x7,5	
C1SS15	2401-001992	C-AL;2200UF,20%,,10V,WT,TP,10X20MM,5	
C1SS16	2401-003480	C-AL;1000UF,20%,,10V,LZ,TP,10X16MM,5	
C1SS17	2401-001992	C-AL;2200UF,20%,,10V,WT,TP,10X20MM,5	
C1SS18	2401-001992	C-AL;2200UF,20%,,10V,WT,TP,10X20MM,5	
C1SS19	2401-000385	C-AL;10uF,20%,,100V,GP,TP,6.3x11,5	
C1SS21	2401-001126	C-AL;330uF,20%,,25V,WT,TP,10x12.5,5	
C1SS22	2401-001126	C-AL;330uF,20%,,25V,WT,TP,10x12.5,5	
C1SS26	2401-001126	C-AL;330uF,20%,,25V,WT,TP,10x12.5,5	
C1SS27	2301-000129	C-FILM,LEAD-PEF;100nF,5%,,50V,TP,10X9X4.3	
CN01	3711-005565	CONNECTOR-HEADER;NOWALL,2P,1R,2mm,STRAI	
CN1SS1	3711-000178	CONNECTOR-HEADER;1WALL,2P,1R,3.96mm,STRA	
D1SF01	0401-000101	DIODE-SWITCHING;1N4148,75V,150MA,DO-35,T	
D1SF02	0402-001195	DIODE-RECTIFIER;FIT4,400V,1A,DO-204AC,,TP	
D1SS01	0402-001196	DIODE-RECTIFIER;1T5,600V,1A,TS-1,TP	
D1SS02	0402-001196	DIODE-RECTIFIER;1T5,600V,1A,TS-1,TP	
D1SS03	0402-001196	DIODE-RECTIFIER;1T5,600V,1A,TS-1,TP	
D1SS04	0402-001196	DIODE-RECTIFIER;1T5,600V,1A,TS-1,TP	
D1SS11	0402-000012	DIODE-RECTIFIER;UF4007,1KV,1A,DO-41,TP	
D1SS12	0404-001225	DIODE-SCHOTTKY;SRAF560,60V,5000mA,ITO-22	
D1SS13	0404-001225	DIODE-SCHOTTKY;SRAF560,60V,5000mA,ITO-22	
D1SS14	0404-001225	DIODE-SCHOTTKY;SRAF560,60V,5000mA,ITO-22	
D1SS15	0402-001195	DIODE-RECTIFIER;FIT4,400V,1A,DO-204AC,,TP	
D1SS16	0402-001194	DIODE-RECTIFIER;UG22,200V,2A,-,TP	
D1SS19	0402-001195	DIODE-RECTIFIER;FIT4,400V,1A,DO-204AC,,TP	
F1SS01	3601-001123	FUSE-CARTRIDGE;250V,1.6A,TIME-LAG,CERAMI	⚠
FZ01	3601-001240	FUSE-RADIAL LEAD;50V,1A,-,-,5.0x4.0x5.0m	
FZ02	3601-001240	FUSE-RADIAL LEAD;50V,1A,-,-,5.0x4.0x5.0m	
IC1SD2	0604-001028	PHOTO-COUPLER;TR,50-600%,,250mW,DIP-4,ST	⚠
IC1SD3	AC14-*20060	IC;KA431Z,TO-92,TAPING	
IC1SS2	1203-002805	IC-PWM CONTROLLER;ICE2BS01,PDIP,8P,9.52X	
L1SS01	AC29-00002A	FILTER LINE NOISE;-,30mH,-,-,BLF-2116	
L1SS02	AC29-00003A	FILTER LINE NOISE;-,20mH MIN,-,-,-	⚠
L1SS03	AC27-12001N	COIL CHOKE;10UH-15%,RA,K-30,080,150KHZ,-	
L1SS04	AC27-12001N	COIL CHOKE;10UH-15%,RA,K-30,080,150KHZ,-	
L1SS05	AC27-12001N	COIL CHOKE;10UH-15%,RA,K-30,080,150KHZ,-	
PT1SD1	AC25-00012J	TRANS SWITCHING;EER-3126,SLV-D950E,-,-,-	⚠
R1SD11	2006-000273	R-CEMENT;27KOHM,5%,2W,CA,BK,6.4X5.5X19M	
R1SD13	2006-000273	R-CEMENT,27KOHM,5%,2W,CA,BK,6.4X5.5X19M	
R1SD14	2001-000598	R-CARBON;3.3OHM,5%,1/8W,AA,TP,1.8X3.2MM	
R1SF05	2001-000527	R-CARBON;22OHM,5%,1/8W,AA,TP,1.8X3.2MM	
R1SF06	2004-000459	R-METAL;2.2Kohm,1%,1/8W,AA,TP,1.8x3.2m	
R1SF07	2003-000105	R-METAL OXIDE;0.33ohm,5%,2W,AD,TP,6x16mm	
R1SQ11	2001-000291	R-CARBON;100OHM,5%,1/8W,AA,TP,1.8X3.2MM	
R1SR01	2001-000548	R-CARBON;270KOHM,5%,1/8W,AA,TP,1.8X3.2M	
R1SR02	2001-000548	R-CARBON;270KOHM,5%,1/8W,AA,TP,1.8X3.2M	
R1SR03	2001-000548	R-CARBON;270KOHM,5%,1/8W,AA,TP,1.8X3.2M	
R1SS01	2006-000262	R-CEMENT;2.7ohm,10%,2W,CB,TP,7.5x11x20.	

R1SS308	2001-000793	R-CARBON;470HM,5%,1/8W,AA,TP,1.8X3.2MM
R1SS31	2001-000780	R-CARBON;470OHM,5%,1/8W,AA,TP,1.8X3.2MM
R1SS32	2001-000429	R-CARBON;1KOHM,5%,1/8W,AA,TP,1.8X3.2MM
R1SS33	2001-000429	R-CARBON;1KOHM,5%,1/8W,AA,TP,1.8X3.2MM
R1SS34	2004-000869	R-METAL;3Kohm,1%,1/8W,AA,TP,1.8x3.2mm
R1SS35	2004-000459	R-METAL;2.2Kohm,1%,1/8W,AA,TP,1.8x3.2m
ZD1SS1	0403-000713	DIODE-ZENER;MTZJ20B,18.63-17.7V,500MW,DO
ZD1SS2	0403-001318	DIODE-ZENER;MTZJ4.3B,4.17-4.43V,500MW,DO

POWER DRIVER PARTS

C1P101	2401-003480	C-AL;1000UF,20%,10V,LZ,TP,10X16MM,5
C1P102	2401-003336	C-AL;4.7UF,20%,50V,GP,TP,5X5,2
C1P103	2401-002026	C-AL;10UF,20%,35V,GP,TP,5X5,2.5
C1P104	2401-000588	C-AL;1uF,20%,50V,GP,TP,3x5,2.5
C1P105	2401-003336	C-AL;4.7UF,20%,50V,GP,TP,5X5,2
C1P106	2401-000463	C-AL;10UF,20%,35V,GP,-,5X5,5
C1P107	2401-002299	C-AL;4.7uF,20%,50V,GP,TP,5x7.5
C1P109	2401-000414	C-AL;10uF,20%,16V,GP,TP,4x7,5
C1P110	2401-000414	C-AL;10uF,20%,16V,GP,TP,4x7,5
C1P111	2401-000463	C-AL;10UF,20%,35V,GP,-,5X5,5
C1P112	2401-002299	C-AL;4.7uF,20%,50V,GP,TP,5x7,5
C1P113	2401-000598	C-AL;1uF,20%,50V,GP,TP,4x7,5
C1P114	2401-002165	C-AL;100uF,20%,16V,GP,TP,6.3x7,5
C1P115	2401-002165	C-AL;100uF,20%,16V,GP,TP,6.3x7,5
C1P116	2401-002299	C-AL;4.7uF,20%,50V,GP,TP,5x7,5
D1P104	0401-000101	DIODE-SWITCHING;1N4148,75V,150MA,DO-35,T
D1P105	0401-000101	DIODE-SWITCHING;1N4148,75V,150MA,DO-35,T
D1P106	0401-000101	DIODE-SWITCHING;1N4148,75V,150MA,DO-35,T
D1P107	0401-000101	DIODE-SWITCHING;1N4148,75V,150MA,DO-35,T
D1P108	0401-000101	DIODE-SWITCHING;1N4148,75V,150MA,DO-35,T
D1P130	0402-000127	DIODE-RECTIFIER;1N4002,100V,1A,DO-41,TP
L1P102	AC27-12001N	COIL CHOKE;10UH-15%,RA,K-30,080,150KHZ,-
Q1P101	0501-000362	TR-SMALL SIGNAL;KSC2328A-Y,NPN,1000MW,TO
Q1P102	0504-000142	TR-DIGITAL;KSR2001,PNP,300MW,4.7K/4.7K,T
Q1P103	0501-000398	TR-SMALL SIGNAL;KSC945,NPN,250mW,TO-92,T
Q1P104	0501-000362	TR-SMALL SIGNAL;KSC2328A-Y,NPN,1000MW,TO
Q1P105	0501-000362	TR-SMALL SIGNAL;KSC2328A-Y,NPN,1000MW,TO
Q1P106	0501-000362	TR-SMALL SIGNAL;KSC2328A-Y,NPN,1000MW,TO
Q1P107	0501-000362	TR-SMALL SIGNAL;KSC2328A-Y,NPN,1000MW,TO
Q1P108	0504-000142	TR-DIGITAL;KSR2001,PNP,300MW,4.7K/4.7K,T
Q1P109	0501-000398	TR-SMALL SIGNAL;KSC945,NPN,250mW,TO-92,T
Q1P110	0501-000362	TR-SMALL SIGNAL;KSC2328A-Y,NPN,1000MW,TO
Q1P111	0501-000362	TR-SMALL SIGNAL;KSC2328A-Y,NPN,1000MW,TO
R1P101	2001-000855	R-CARBON;5600HM,5%,1/4W,AA,TP,2.4X6.4MM
R1P103	2007-000402	R-CHIP;150ohm,5%,1/10W,TP,1608
R1P104	2001-000449	R-CARBON;2.2KOHM,5%,1/8W,AA,TP,1.8X3.2M
R1P105	2001-000969	R-CARBON;750HM,5%,1/8W,AA,TP,1.8X3.2MM
R1P106	2001-000382	R-CARBON;1500HM,5%,1/8W,AA,TP,1.8X3.2MM
R1P110	2001-000449	R-CARBON;2.2KOHM,5%,1/8W,AA,TP,1.8X3.2M
R1P111	2001-000062	R-CARBON;470OHM,5%,1/4W,AA,TP,2.4X6.4MM
R1P112	2001-000302	R-CARBON;100HM,5%,1/8W,AA,TP,1.8X3.2MM
R1P122	2007-000134	R-CHIP;33Kohm,5%,1/10W,TP,1608
ZD1P02	0403-001211	DIODE-ZENER;MTZJ12B,11.8-12.3V,500MW,DO-
ZD1P03	0403-000720	DIODE-ZENER;MTZJ8.1B,8.57-9.01V,500MW,DO
ZD1P04	0403-000717	DIODE-ZENER;MTZJ5.1B,4.94-5.2V,500MW,DO-
ZD1P05	0403-001211	DIODE-ZENER;MTZJ12B,11.8-12.3V,500MW,DO-
ZD1P06	0403-000717	DIODE-ZENER;MTZJ5.1B,4.94-5.2V,500MW,DO-

SYSTEM CONTROL/SERVO PARTS

C601	2203-002398	C-CER,CHIP,22nF,10%,50V,X7R,TP,1608
C602	2401-002095	C-AL;47uF,20%,25V,GP,TP,6.3x5,5
C605	2203-000257	C-CER,CHIP,10nF,10%,50V,X7R,TP,1608
C606	2203-000257	C-CER,CHIP,10nF,10%,50V,X7R,TP,1608
C607	2401-000119	C-AL;1000UF,20%,10V,GP,TP,10X12.5
C607A	2401-003107	C-AL;47uF,20%,16V,GP,TP,5x7,5
C608	2401-002259	C-AL;0.1F,+80-20%,5.5V,-,TP,12.5x11

C610	2202-002037	C-CERAMIC,MLC-AXIAL,100nF,80-20%,50V,Y5V
C618	2401-003960	C-AL;100uF,20%,50V,GP,TP,8x11.5,5
C618A	2401-002095	C-AL;47uF,20%,25V,GP,TP,6.3x5,5
C619	2203-000257	C-CER,CHIP,10nF,10%,50V,X7R,TP,1608
C620	2401-001543	C-AL;47uF,20%,25V,GP,TP,6.3x5mm,2.5
C621	2203-000257	C-CER,CHIP,10nF,10%,50V,X7R,TP,1608
C623	2203-000257	C-CER,CHIP,10nF,10%,50V,X7R,TP,1608
C624	2203-000626	C-CER,CHIP,0.022nF,5%,50V,C0G,TP,1608
C625	2203-000626	C-CER,CHIP,0.022nF,5%,50V,C0G,TP,1608
C626	2203-000626	C-CER,CHIP,0.022nF,5%,50V,C0G,TP,1608
C627	2203-000626	C-CER,CHIP,0.022nF,5%,50V,C0G,TP,1608
C628	2203-000681	C-CER,CHIP,0.027NF,5%,50V,C0G,TP,1608
C633	2203-000257	C-CER,CHIP,10nF,10%,50V,X7R,TP,1608
C635	2203-000491	C-CER,CHIP,2.2nF,10%,50V,X7R,TP,1608,-
C636	2203-000491	C-CER,CHIP,2.2nF,10%,50V,X7R,TP,1608,-
C637	2203-001656	C-CER,CHIP,0.47nF,5%,50V,NP0,TP,1608
C638	2401-002196	C-AL;4.7UF,20,25V,GP,TP,4X5,5MM,-
C639	2203-000236	C-CER,CHIP,0.1NF,5%,50V,C0G,TP,1608
C640	2203-005148	C-CER,CHIP,100nF,10%,16V,X7R,TP,1608
C641	2401-003221	C-AL;100uF,20%,16V,GP,TP,8X5,2.5
C642	2401-002095	C-AL;47uF,20%,25V,GP,TP,6.3x5,5
C645	2203-000357	C-CER,CHIP,0.15NF,5%,50V,C0G,TP,1608
C646	2203-005148	C-CER,CHIP,100nF,10%,16V,X7R,TP,1608
C659A	2203-001140	C-CER,CHIP,68nF,10%,16V,X7R,TP,1608
C661	2202-002055	C-CERAMIC,MLC-AXIAL,47nF,+80-20%,,50V,Y5V
C686	2401-003107	C-AL;47uF,20%,16V,GP,TP,5x7,5
C691	2203-000257	C-CER,CHIP,10nF,10%,50V,X7R,TP,1608
C695	2203-000357	C-CER,CHIP,0.15NF,5%,50V,C0G,TP,1608
C696	2203-002236	C-CER,CHIP,0.1NF,5%,50V,C0G,TP,1608
CN604	AC37-00027A	CONNECTOR-HEADER,2004SMS,X-11,TB,5,W17.4
D603	0401-000101	DIODE-SWITCHING;1N4148,75V,150MA,DO-35,T
D620	0402-000127	DIODE-RECTIFIER;1N4002,100V,1A,DO-41,TP
D686	0401-000101	DIODE-SWITCHING;1N4148,75V,150MA,DO-35,T
D692	0402-000127	DIODE-RECTIFIER;1N4002,100V,1A,DO-41,TP
IC601	AC05-00506A	IC,MICOM;N126-B64-3BA,SV-DVD440-02,100F
IC604	AC14-12006C	IC,KA7533,DIP,-
IC605	1103-001150	IC-EEPROM,24C02B,1Kx8,DIP,8PS,2x6.4mm,2
IC608	1203-000515	IC-VOL. DETECTOR,7042,TO-92,3P,177MIL,PL
L603	2701-000002	INDUCTOR-AXIAL,100UH,10%,4296
L605	2701-000002	INDUCTOR-AXIAL;100UH,10%,4296
LD601	0601-001817	LED-IR;SIDE-VIEW,2.5mm,75mW,5V,940,TR
PT601	0604-001275	PHOTO-INTERRUPTER;-,-,SNAP,TR
PT602	0604-001275	PHOTO-INTERRUPTER;-,-,SNAP,TR
Q601	0504-000129	TR-DIGITAL;KSR1104,NPN,200mW,47K/47K,SOT
R608	2001-000864	R-CARBON;56KOHM,5%,1/8W,AA,TP,1.8X3.2MM
R609	2001-000864	R-CARBON;56KOHM,5%,1/8W,AA,TP,1.8X3.2MM
R610	2001-000281	R-CARBON;1000HM,5%,1/8W,AA,TP,1.8X3.2MM
R611	2001-000281	R-CARBON;1000HM,5%,1/8W,AA,TP,1.8X3.2MM
R613	2007-000078	R-CHIP;1Kohm,5%,1/10W,TP,1608
R614	2001-000429	R-CARBON,1KOHM,5%,1/8W,AA,TP,1.8X3.2MM
R615	2001-000429	R-CARBON,1KOHM,5%,1/8W,AA,TP,1.8X3.2MM
R617	2001-000864	R-CARBON;56KOHM,5%,1/8W,AA,TP,1.8X3.2MM
R629	2007-000090	R-CHIP;10Kohm,5%,1/10W,TP,1608
R622	2007-000090	R-CHIP;10Kohm,5%,1/10W,TP,1608
R630	2007-000090	R-CHIP;10Kohm,5%,1/10W,TP,1608
R631	2007-000078	R-CHIP;1Kohm,5%,1/10W,TP,1608
R632	2001-000429	R-CARBON,1KOHM,5%,1/8W,AA,TP,1.8X3.2MM
R633	2001-000429	R-CARBON,1KOHM,5%,1/8W,AA,TP,1.8X3.2MM
R634	2007-000094	R-CHIP,4.7Kohm,5%,1/10W,TP,1608
R635	2007-000094	R-CHIP,4.7Kohm,5%,1/10W,TP,1608
R636	2001-000281	R-CARBON,1000HM,5%,1/8W,AA,TP,1.8X3.2MM
R640	2007-000090	R-CHIP;10Kohm,5%,1/10W,TP,1608
R641	2001-000780	R-CARBON,470OHM,5%,1/8W,AA,TP,1.8X3.2MM
R642	2001-000780	R-CARBON,470OHM,5%,1/8W,AA,TP,1.8X3.2MM
R644	2007-000078	R-CHIP;1Kohm,5%,1/10W,TP,1608
R647	2001-000429	R-CARBON;1KOHM,5%,1/8W,AA,TP,1.8X3.2MM

R651	2001-000010	R-CARBON;68KOHM,5%,1/8W,AA,TP,1.8X3.2MM
R652	2001-000568	R-CARBON,27OHM,5%,1/8W,AA,TP,1.8X3.2MM
R657	2007-000100	R-CHIP;68Kohm,5%,1/10W,TP,1608
R660	2001-000795	R-CARBON;47KOHM,5%,1/8W,AA,TP,1.8X3.2MM
R661	2001-000660	R-CARBON;33KOHM,5%,1/8W,AA,TP,1.8X3.2MM
R666	2007-000084	R-CHIP;4.7Kohm,5%,1/10W,TP,1608
R667	2007-000084	R-CHIP;4.7Kohm,5%,1/10W,TP,1608
R668	2001-000780	R-CARBON;470OHM,5%,1/8W,AA,TP,1.8X3.2MM
R669	2001-000780	R-CARBON;470OHM,5%,1/8W,AA,TP,1.8X3.2MM
R670	2001-000734	R-CARBON;4.7KOHM,5%,1/8W,AA,TP,1.8X3.2M
R671	2001-000734	R-CARBON;4.7KOHM,5%,1/8W,AA,TP,1.8X3.2M
R672	2001-000734	R-CARBON;4.7KOHM,5%,1/8W,AA,TP,1.8X3.2M
R673	2001-000429	R-CARBON;1KOHM,5%,1/8W,AA,TP,1.8X3.2MM
R674	2007-000090	R-CHIP;10Kohm,5%,1/10W,TP,1608
R675	2001-000332	R-CARBON;180OHM,5%,1/4W,AA,TP,2.4X6.4MM
R676	2001-000633	R-CARBON;30KOHM,5%,1/8W,AA,TP,1.8X3.2MM
R678	2007-000094	R-CHIP;22Kohm,5%,1/10W,TP,1608
R679	2007-000075	R-CHIP,270ohm,5%,1/10W,TP,1608
R682	2007-000094	R-CHIP;22Kohm,5%,1/10W,TP,1608
R685	2001-000812	R-CARBON;5.6KOHM,5%,1/8W,AA,TP,1.8X3.2M
R688	2007-000655	R-CHIP;27Kohm,5%,1/10W,TP,1608
R691	2007-000075	R-CHIP,270ohm,5%,1/10W,TP,1608
R693	2007-000097	R-CHIP;47Kohm,5%,1/10W,TP,1608
R694	2007-000097	R-CHIP;47Kohm,5%,1/10W,TP,1608
R698	2001-000290	R-CARBON;10KOHM,5%,1/8W,AA,TP,1.8X3.2MM
S632	0605-001134	PHOTO TR;-,30V,40,50mA,75mW,-,TRAY
SW601	AC34-00065A	SWITCH-MODE;-,-,-,-,-,-,-,-,-,-,-,-,-,-,-
SW602	AC34-00066A	SWITCH-REC;-,-,-,-,-,-,-,-,-,-,-,-,-,-,-
W668	2007-000070	R-CHIP,0ohm,5%,1/10W,TP,1608 — DVD-V540/FES Only
XT601	2801-003318	CRYSTAL-UNIT,32.768KHz,20ppm,26-AAP,12.5
XT602	2801-003139	CRYSTAL-UNIT,8MHz,50ppm,26-AAA,22pF,80oh

AUDIO/VIDEO PARTS

C315	2203-000975	C-CER,CHIP,47nF,10%,25V,X7R,TP,1608,-
C317	2401-000586	C-AL;1uF,20%,50V,GP,TP,3x5,2.5
C318	2401-000588	C-AL;1uF,20%,50V,GP,TP,3x5,2.5
C319	2203-000643	C-CER,CHIP,39nF,10%,25V,X7R,TP,1608,-
C320	2203-000975	C-CER,CHIP,47nF,10%,25V,X7R,TP,1608,-
C321	2203-002398	C-CER,CHIP,22nF,10%,50V,X7R,TP,1608
C322	2401-000588	C-AL;1uF,20%,50V,GP,TP,3x5,2.5
C324	2203-000257	C-CER,CHIP,10nF,10%,50V,X7R,TP,1608
C325	2401-001502	C-AL;47uF,20%,16V,GP,TP,6.3x5,2.5
C326	2401-000588	C-AL;1uF,20%,50V,GP,TP,3x5,2.5
C327	2203-001211	C-CER,CHIP,8.2nF,10%,50V,X7R,TP,1608,-
C328	2203-000257	C-CER,CHIP,10nF,10%,50V,X7R,TP,1608
C329	2203-005148	C-CER,CHIP,100nF,10%,16V,X7R,TP,1608
C330	2203-000975	C-CER,CHIP,47nF,10%,25V,X7R,TP,1608,-
C331	2203-005148	C-CER,CHIP,100nF,10%,16V,X7R,TP,1608
C332	2203-000975	C-CER,CHIP,47nF,10%,25V,X7R,TP,1608,-
C333	2401-000408	C-AL;10uF,20%,16V,GP,TP,3.5x5,2.5
C334	2203-000975	C-CER,CHIP,47nF,10%,25V,X7R,TP,1608,-
C334A	2203-000236	C-CER,CHIP,0.1NF,5%,50V,C0G,TP,1608
C335	2203-001652	C-CER,CHIP,470nF,+80-20%,16V,Y5V,TP,1608
C336	2203-000575	C-CER,CHIP,47nF,10%,25V,X7R,TP,1608,-
C337	2203-001652	C-CER,CHIP,470nF,+80-20%,16V,Y5V,TP,1608
C338	2203-000639	C-CER,CHIP,22nF,10%,50V,X7R,TP,2012
C339	2401-000408	C-AL;10uF,20%,16V,GP,TP,3.5x5,2.5
C340	2401-001226	C-AL;4.7uF,20%,16V,BP,TP,4x7,5mm
C341	2401-003167	C-AL;47uF,20%,16V,GP,TP,5x7,5
C342	2202-002537	C-CERAMIC,MLC-AXIAL,100nF,80-20%,,50V,Y5V
C343	2203-005065	C-CER,CHIP,1000nF,+80-20%,,10V,Y5V,-,1608
C344	2203-000315	C-CER,CHIP,0.12NF,5%,50V,C0G,TP,1608
C345	2203-001607	C-CER,CHIP,0.22nF,5%,50V,NP0,-,1608
C347	2203-005065	C-CER,CHIP,1000nF,+80-20%,,10V,Y5V,-,1608
C348	2203-005148	C-CER,CHIP,100nF,10%,16V,X7R,TP,1608
C349	2203-005065	C-CER,CHIP,1000nF,+80-20%,,10V,Y5V,-,1608

C350	2203-005149	C-CER,CHIP,100nF,10%,,16V,X7R,TP,1608
C351	2401-003107	C-AL;47uF,20%,16V,GP,TP,5x7,5
C352	2401-000588	C-AL;1uF,20%,50V,GP,TP,3x5,2.5
C353	2401-000588	C-AL;1uF,20%,50V,GP,TP,3x5,2.5
C354	2401-001502	C-AL;47uF,20%,16V,GP,TP,6.3x5,2.5
C355	2203-000975	C-CER,CHIP,47nF,10%,25V,X7R,TP,1608,-
C355A	2203-000236	C-CER,CHIP,0.1NF,5%,50V,C0G,TP,1608
C380	2203-002398	C-CER,CHIP,22nF,10%,50V,X7R,TP,1608
C384	2203-005148	C-CER,CHIP,100nF,10%,16V,X7R,TP,1608
C385	2401-002165	C-AL;100uF,20%,16V,GP,TP,6.3x7,5
C3A01	2401-002299	C-AL;4.7uF,20%,50V,GP,TP,5x7,5
C3A02	2401-000922	C-AL,22uF,20%,16V,GP,TP,5x5,5
C3A08	2203-000257	C-CER,CHIP,10nF,10%,50V,X7R,TP,1608
C3A09	2203-001103	C-CER,CHIP,5.6nF,10%,50V,X7R,TP,1608,-
C3A10	2203-001211	C-CER,CHIP,8.2nF,10%,50V,X7R,TP,1608,-
C3A11	2301-001680	C-FILM,PEF,15nF,5%,50V,TP,6.3x3x7mm,-
C3A12	2401-002095	C-AL;47uF,20%,25V,GP,TP,6.3x5,5
C3A14	2202-000253	C-CERAMIC,MLC-AXIAL;470pF,10%,50V,Y5P,TP
C3A15	2203-000257	C-CER,CHIP,10nF,10%,50V,X7R,TP,1608
C3A16	2401-002299	C-AL;4.7uF,20%,50V,GP,TP,5x7,5
C3A17	2401-000414	C-AL;10uF,20%,16V,GP,TP,4x7,5
C3A18	2203-001126	C-CER,CHIP,0.68nF,10%,50V,X7R,TP,1608
C3A21A	2203-001554	C-CER,CHIP,1.8nF,10%,50V,X7R,TP,1608
C3A23	2401-002099	C-AL,33uF,20%,16V,GP,TP,6.3x5,5
C3A24	2203-005148	C-CER,CHIP,100nF,10%,16V,X7R,TP,1608
C3A29	2203-005148	C-CER,CHIP,100nF,10%,16V,X7R,TP,1608
C3A30	2401-001502	C-AL;47uF,20%,16V,GP,TP,6.3x5,2.5
C3A40	2401-000414	C-AL;10uF,20%,16V,GP,TP,4x7,5
C3A41	2401-000588	C-AL;1uF,20%,50V,GP,TP,3x5,2.5
C3A70	2203-001126	C-CER,CHIP,0.68nF,10%,50V,X7R,TP,1608
C3A71	2007-000070	R-CHIP;0ohm,5%,1/10W,TP,1608
C301	2203-000257	C-CER,CHIP,10nF,10%,50V,X7R,TP,1608
C302	2202-000243	C-CERAMIC,MLC-AXIAL,33pF,5%,50V,SL,TP,3.
C303	2203-001086	C-CER,CHIP,0.005nF,0.25pF,50V,NP0,TP,160
C304	2203-000257	C-CER,CHIP,10nF,10%,50V,X7R,TP,1608
CN301	3709-000391	CONNECTOR-FPC/FFC/PIC;10P,1.25MM,STRAIGH
CN3A01	3709-001165	CONNECTOR-FPC/FFC/PIC,6P,1.25MM,STRAIGHT
CN3A02	AC37-00028A	CONNECTOR-SOCKET,-,X-11,TB,0,WB,5,PST NT
CN3A1S	3809-001206	CABLE-FLAT,30V,-20to+80C,140mm,6P,1.25mm
D301	0401-000101	DIODE-SWITCHING;1N4148,75V,150MA,DO-35,T
D302	0402-000127	DIODE-RECTIFIER;1N4002,100V,1A,DO-41,TP
D303	0401-000101	DIODE-SWITCHING;1N4148,75V,150MA,DO-35,T
PL3A01	2702-000166	INDUCTOR-RADIAL;47uH,5%,6.0x6.4mm
IC301	1204-002140	IC-VIDEO PROCESS;LA71750EM-MPB-E,DFP,100
L301	2701-000002	INDUCTOR-AXIAL;100uH,10%,4296
L301A	2701-000002	INDUCTOR-AXIAL;100uH,10%,4296
L302	2701-000002	INDUCTOR-AXIAL;100uH,10%,4296
L303	2701-000002	INDUCTOR-AXIAL;100uH,10%,4296
L304	3301-000297	BEAD-AXIAL;25ohm,3.6x1.2x5.7mm,TP,,,
L370	2701-000113	INDUCTOR-AXIAL;100uH,5%,2534
L3A01	2702-000120	INDUCTOR-RADIAL;15000uH,5%,6.2x7.4mm
L3A02	2701-000002	INDUCTOR-AXIAL;100uH,10%,4296
L3A03	2701-000002	INDUCTOR-AXIAL;100uH,10%,4296
L3A70	2702-000120	INDUCTOR-RADIAL;15000uH,5%,6.2x7.4mm
L301	2701-000206	INDUCTOR-AXIAL,56uH,5%,2434
L302	2701-000131	INDUCTOR-AXIAL,15uH,5%,2534
Q302	0501-000341	TR-SMALL SIGNAL;KSC1623-L,NPN — DVD-V540/AFR Only
Q351	0501-000002	TR-SMALL SIGNAL;KSA812,PNP,150MW,SOT-23,
Q3A01	0501-000398	TR-SMALL SIGNAL;KSC945,NPN,250mW,TO-92,T
Q3A02	0501-000303	TR-SMALL SIGNAL;KSA733,PNP,250mW,TO-92,T
Q3A03	0501-000442	TR-SMALL SIGNAL;KTC3203-Y,NPN,400mW,TO-9
Q3A04	0501-000442	TR-SMALL SIGNAL;KTC3203-Y,NPN,400mW,TO-9
Q3A25	0501-000442	TR-SMALL SIGNAL;KTC3203-Y,NPN,400mW,TO-9
Q3A06	0501-000303	TR-SMALL SIGNAL;KSA733,PNP,250mW,TO-92,T
Q301	0501-000341	TR-SMALL SIGNAL;KSC1623-L,NPN,200mW,SOT-
Q302	0501-000341	TR-SMALL SIGNAL;KSC1623-L,NPN,200mW,SOT-

Loc.No.	Part No.	Description : Specification	Remark
Q303	0501-000341	TR-SMALL SIGNAL,KSC1623-L,NPN,200mW,SOT-	
Q304	0501-000341	TR-SMALL SIGNAL,KSC1623-L,NPN,200mW,SOT-	
Q305	0504-000152	TR-DIGITAL,KSR2101,PNP,200mW,4.7K/4.7K,S	
Q306	0504-000129	TR-DIGITAL,KSR1104,NPN,200mW,47K/47K,SOT	
Q307	0501-000341	TR-SMALL SIGNAL,KSC1623-L,NPN,200mW,SOT-	
R315	2007-000122	R-CHIP;1.2Kohm,5%,1/10W,TP,1608	
R316	2007-001179	R-CHIP;9.2Kohm,5%,1/10W,TP,1608	
R320	2007-000458	R-CHIP;18Kohm,5%,1/10W,TP,1608	
R321	2007-000095	R-CHIP;10Kohm,5%,1/10W,TP,1608	
R322	2007-000458	R-CHIP;18Kohm,5%,1/10W,TP,1608	
R323	2007-000125	R-CHIP;3.9Kohm,5%,1/10W,TP,1608	
R324	2007-000079	R-CHIP;1.8Kohm,5%,1/10W,TP,16	DVD-V540/AFR Only
R325	2001-000281	R-CARBON;100OHM,5%,1/8W,AA,TP,1.8X3.2MM	
R326	2001-000291	R-CARBON;100OHM,5%,1/8W,AA,TP,1.8X3.2MM	
R327	2007-000084	R-CHIP;4.7Kohm,5%,1/10W,TP,1608	
R328	2007-000122	R-CHIP;1.2Kohm,5%,1/10W,TP,1608	
R329	2007-000081	R-CHIP;2.7Kohm,5%,1/10W,TP,1608	
R330	2007-000087	R-CHIP;6.8Kohm,5%,1/10W,TP,1608	
R331	2007-000079	R-CHIP;1.8Kohm,5%,1/10W,TP,1608	
R333	2007-001039	R-CHIP;56Kohm,5%,1/8W,TP,2012	
R334	2007-000123	R-CHIP;1.5Kohm,5%,1/10W,TP,1608	
R335	2001-000291	R-CARBON;100OHM,5%,1/8W,AA,TP,1.8X3.2MM	
R350	2007-000123	R-CHIP;1.5Kohm,5%,1/10W,TP,16	DVD-V540/AFR Only
R360	2007-001196	R-CHIP;820Kohm,5%,1/10W,TP,1608	
R371	2007-000119	R-CHIP;560ohm,5%,1/10W,TP,1608	
R372	2007-000078	R-CHIP;1Kohm,5%,1/10W,TP,1608	
R373	2007-000093	R-CHIP;20Kohm,5%,1/10W,TP,1608	
R380	2007-000124	R-CHIP;2.2Kohm,5%,1/10W,TP,1608	
R3A01	2007-000090	R-CHIP;10Kohm,5%,1/10W,TP,1608	
R3A04	2001-000221	R-CARBON;1.2KOHM,5%,1/8W,AA,TP,1.8X3.2M	
R3A05	2007-000616	R-CHIP;24Kohm,5%,1/10W,TP,1608	
R3A06	2007-000539	R-CHIP;200ohm,5%,1/10W,TP,1608	
R3A07	2007-000133	R-CHIP;330Kohm,5%,1/10W,TP,1608	
R3A08	2007-000091	R-CHIP;12Kohm,5%,1/10W,TP,1608	
R3A09	2007-000070	R-CHIP;0ohm,5%,1/10W,TP,1608	
R3A11	2007-000124	R-CHIP;2.2Kohm,5%,1/10W,TP,1608	
R3A12	2007-000074	R-CHIP;100ohm,5%,1/10W,TP,1608	
R3A13	2007-000097	R-CHIP;47Kohm,5%,1/10W,TP,1608	
R3A14	2007-000094	R-CHIP;22Kohm,5%,1/10W,TP,1608	
R3A16	2007-000090	R-CHIP;10Kohm,5%,1/10W,TP,1608	
R3A17	2007-000124	R-CHIP;2.2Kohm,5%,1/10W,TP,1608	
R3A18	2007-000124	R-CHIP;2.2Kohm,5%,1/10W,TP,1608	
R3A23	2007-000091	R-CHIP;12Kohm,5%,1/10W,TP,1608	
R3A24	2007-000094	R-CHIP;22Kohm,5%,1/10W,TP,1608	
R3A25	2001-000221	R-CARBON;1.2KOHM,5%,1/8W,AA,TP,1.8X3.2M	
R3A26	2007-000090	R-CHIP;10Kohm,5%,1/10W,TP,1608	
R3A28	2007-000124	R-CHIP;2.2Kohm,5%,1/10W,TP,1608	
R3A50	2001-000800	R-CARBON;5.1KOHM,5%,1/8W,AA,TP,1.8X3.2M	
R3A51	2007-000090	R-CHIP;10Kohm,5%,1/10W,TP,1608	
R3A60	2007-000704	R-CHIP;3.6Kohm,5%,1/10W,TP,1608	
R3A70	2007-000084	R-CHIP;4.7Kohm,5%,1/10W,TP,1608	
R3Q1	2007-000122	R-CHIP;1.2Kohm,5%,1/10W,TP,1608	
R3Q12	2001-000068	R-CARBON;15KOHM,5%,1/8W,AA,TP,1.8X3.2MM	
R3Q2	2007-000090	R-CHIP;10Kohm,5%,1/10W,TP,1608	
R3Q3	2007-000076	R-CHIP;330ohm,5%,1/10W,TP,1608	
R3Q4	2007-001056	R-CHIP;6.2Kohm,5%,1/10W,TP,1608	
R3Q5	2007-000076	R-CHIP;330ohm,5%,1/10W,TP,1608	
R3Q6	2001-000252	R-CARBON;1.5KOHM,5%,1/8W,AA,TP,1.8X3.2M	
R3Q7	2001-000007	R-CARBON;3KOHM,5%,1/8W,AA,TP,1.8X3.2MM	
R3Q8	2007-000076	R-CHIP;330ohm,5%,1/10W,TP,1608	
R3Q9	2001-000958	R-CARBON;750OHM,5%,1/8W,AA,TP,1.8X3.2MM	
W177	2001-000429	R-CARBON;1KOHM,5%,1/8W,AA,TP,1.8X3.2MM	
W178	2001-000429	R-CARBON;1KOHM,5%,1/8W,AA,TP,1.8X3.2MM	
W205	2001-000291	R-CARBON;100OHM,5%,1/8W,AA,TP,1.8X3.2MM	
W206	2001-000291	R-CARBON;100OHM,5%,1/8W,AA,TP,1.8X3.2MM	
W311	2701-000002	INDUCTOR-AXIAL;100UH,10%,4298	

Loc.No.	Part No.	Description : Specification	Remark
XT301	2801-001397	CRYSTAL-UNIT;4.433619MHz,20ppm,28-AAA,S,	
TM-BLOCK PARTS			
C401	2401-003107	C-AL;47uF,20%,16V,GP,TP,5x7.5	
C402	2203-002398	C-CER,CHIP;22nF,10%,50V,X7R,TP,1608	
C403	2401-001502	C-AL;47uF,20%,16V,GP,TP,6.3x5.2.5	
C404	2401-001077	C-AL;330uF,20%,50V,GP,TP,4x7mm,5mm	
C405	2401-002438	C-AL;47uF,20%,50V,WT,TP,6.3x11.5	
C406	2203-000257	C-CER,CHIP;10nF,10%,50V,X7R,TP,1608	
C407	2401-003107	C-AL;47uF,20%,16V,GP,TP,5x7.5	
C409	2401-002299	C-AL;4.7uF,20%,50V,GP,TP,5x7.5	
C410	2203-000257	C-CER,CHIP;10nF,10%,50V,X7R,TP,1608	
D401	0402-000127	DIODE-RECTIFIER;1N4002,100V,1A,DO-41,TP	
L401	AC27-12001N	COIL CHOKE;10UH-15%,RA,K-30,080,150KHZ,-	
Q401	0501-000002	TR-SMALL SIGNAL,KSA812,PNP,150MW,SOT-23,	
R401	2001-000786	R-CARBON;47KOHM,5%,1/8W,AA,TP,1.8X3.2MM	
R402	2001-000281	R-CARBON;100OHM,5%,1/8W,AA,TP,1.8X3.2MM	
R403	2001-000281	R-CARBON;100OHM,5%,1/8W,AA,TP,1.8X3.2MM	
R404	2001-000281	R-CARBON;100OHM,5%,1/8W,AA,TP,1.8X3.2MM	
R406	2007-001010	R-CHIP;51Kohm,5%,1/10W,TP,1608	
R408	2007-000122	R-CHIP;1.2Kohm,5%,1/10W,TP,1608	
R440	2001-000362	R-CARBON;150OHM,5%,1/8W,AA,TP,1.8X3.2MM	
R441	2007-000116	R-CHIP;120ohm,5%,1/10W,TP,1608	
TM401	AC40-00029A	TM BLOCK,TCM0360D1PD20A,PAL B/G + I + D/	
W404	2001-000780	R-CARBON;470OHM,5%,1/8W,AA,TP,1.8X3.2MM	
ZD401	0403-000390	DIODE-ZENER;UZP33B,31.4-34.6V,1000MW,DO-	
HI-FI PARTS			
C501	2401-000408	C-AL;10uF,20%,16V,GP,TP,3.5x5,2.5	
C502	2203-005148	C-CER,CHIP;100nF,10%,16V,X7R,TP,1608	
C503	2401-000909	C-AL;22uF,20%,16V,GP,TP,5x5,2.5	
C504	2401-000408	C-AL;10uF,20%,16V,GP,TP,3.5x5,2.5	
C505	2401-001249	C-AL;4.7uF,20%,35V,GP,TP,4x5,2.5	
C506	2203-000257	C-CER,CHIP;10nF,10%,50V,X7R,TP,1608	
C507	2401-000909	C-AL;22uF,20%,16V,GP,TP,5x5,2.5	
C508	2203-000888	C-CER,CHIP;4.7nF,10%,50V,X7R,TP,1608	
C510	2401-001502	C-AL;47uF,20%,16V,GP,TP,6.3x5,2.5	
C511	2203-000257	C-CER,CHIP;10nF,10%,50V,X7R,TP,1608	
C513	2203-000257	C-CER,CHIP;10nF,10%,50V,X7R,TP,1608	
C517	2203-000888	C-CER,CHIP;4.7nF,10%,50V,X7R,TP,1608	
C518	2401-000909	C-AL;22uF,20%,16V,GP,TP,5x5,2.5	
C519	2203-000257	C-CER,CHIP;10nF,10%,50V,X7R,TP,1608	
C520	2401-001249	C-AL;4.7uF,20%,35V,GP,TP,4x5,2.5	
C521	2401-000408	C-AL;10uF,20%,16V,GP,TP,3.5x5,2.5	
C522	2203-005148	C-CER,CHIP;100nF,10%,16V,X7R,TP,1608	
C523	2203-005148	C-CER,CHIP;100nF,10%,16V,X7R,TP,1608	
C524	2401-001249	C-AL;4.7uF,20%,35V,GP,TP,4x5,2.5	
C525	2401-001249	C-AL;4.7uF,20%,35V,GP,TP,4x5,2.5	
C526	2401-002165	C-AL;100uF,20%,16V,GP,TP,6.3x7.5	
C527	2202-000797	C-CERAMIC,MLC-AXIAL;10NF,30%,16V,Y5S,TP,	
C529	2401-001250	C-AL;4.7uF,20%,35V,GP,TP,4x5,5	
C530	2203-005148	C-CER,CHIP;100nF,10%,16V,X7R,TP,1608	
C535	2203-005148	C-CER,CHIP;100nF,10%,16V,X7R,TP,1608	
C536	2203-005148	C-CER,CHIP;100nF,10%,16V,X7R,TP,1608	
C537	2401-000665	C-AL;2.2uF,20%,50V,GP,TP,3.5x5,5	
C538	2401-002569	C-AL;2.2uF,20%,50V,GP,TP,4x5,2.5	
C539	2401-001250	C-AL;4.7uF,20%,35V,GP,TP,4x5,5	
C540	2401-001250	C-AL;4.7uF,20%,35V,GP,TP,4x5,5	
C541	2401-000588	C-AL;1uF,20%,50V,GP,TP,3x5,2.5	
D501	0402-000127	DIODE-RECTIFIER;1N4002,100V,1A,DO-41,TP	
IC501	1204-001920	IC-AUDIO PROCESSOR;LA76946M,DIP,80P,14X1	
R501	2001-000766	R-CARBON;43KOHM,5%,1/8W,AA,TP,1.8X3.2MM	
R502	2007-001056	R-CHIP;6.2Kohm,5%,1/10W,TP,1608	
R503	2001-000780	R-CARBON;470OHM,5%,1/8W,AA,TP,1.8X3.2MM	
R505	2001-000766	R-CARBON;43KOHM,5%,1/8W,AA,TP,1.8X3.2MM	
R506	2007-001056	R-CHIP;6.2Kohm,5%,1/10W,TP,1608	

Loc.No.	Part No.	Description : Specification	Remark
R507	2001-000766	R-CARBON;43KOHM,5%,1/8W,AA,TP,1.8X3.2MM	
R508	2007-001056	R-CHIP;6.2Kohm,5%,1/10W,TP,1608	
R509	2007-000087	R-CHIP;6.8Kohm,5%,1/10W,TP,1608	
R510	2007-000913	R-CHIP;43Kohm,5%,1/10W,TP,1608	
R511	2007-000090	R-CHIP;10Kohm,5%,1/10W,TP,1608	
R512	2001-000660	R-CARBON;33KOHM,5%,1/8W,AA,TP,1.8X3.2MM	
R517	2007-000087	R-CHIP;6.8Kohm,5%,1/10W,TP,1608	
R518	2007-000913	R-CHIP;43Kohm,5%,1/10W,TP,1608	
R519	2007-001056	R-CHIP;6.2Kohm,5%,1/10W,TP,1608	
R520	2001-000786	R-CARBON;43KOHM,5%,1/8W,AA,TP,1.8X3.2MM	
R521	2007-000087	R-CHIP;6.8Kohm,5%,1/10W,TP,1608	
R522	2007-001071	R-CHIP;6.8Kohm,5%,1/8W,TP,2012	
R533	2007-000003	R-CHIP;43Kohm,5%,1/8W,TP,2012	
R540	2001-000766	R-CARBON;43KOHM,5%,1/8W,AA,TP,1.8X3.2MM	
R545	2007-000512	R-CHIP;2.4Kohm,5%,1/10W,TP,1608	
R546	2007-000078	R-CHIP;1Kohm,5%,1/10W,TP,1608	
R547	2007-000078	R-CHIP;1Kohm,5%,1/10W,TP,1608	
R550	2001-000766	R-CARBON;43KOHM,5%,1/8W,AA,TP,1.8X3.2MM	
R551	2007-000093	R-CHIP;20Kohm,5%,1/10W,TP,1608	
R552	2007-000913	R-CHIP;43Kohm,5%,1/10W,TP,1608	
R553	2007-000093	R-CHIP;20Kohm,5%,1/10W,TP,1608	
R570	2007-000078	R-CHIP;1Kohm,5%,1/10W,TP,1608	
R571	2007-000098	R-CHIP;56Kohm,5%,1/10W,TP,1608	
SECAM PARTS			
C3S01	2203-000257	C-CER,CHIP;10nF,10%,50V,X7R,T	DVD-V540/AFR Only
C3S02	2401-000598	C-AL;1uF,20%,50V,GP,TP,4x7.5	DVD-V540/AFR Only
C3S03	2203-000257	C-CER,CHIP;10nF,10%,50V,X7R,T	DVD-V540/AFR Only
C3S04	2401-000598	C-AL;1uF,20%,50V,GP,TP,4x7.5	DVD-V540/AFR Only
C3S05	2203-005148	C-CER,CHIP;100nF,10%,16V,X7R,	DVD-V540/AFR Only
C3S06	2401-001324	C-AL;0.47UF,20%,50V,GP,BK,3X5	DVD-V540/AFR Only
C3S07	2007-000070	R-CHIP;0ohm,5%,1/10W,TP,1608	DVD-V540/AFR Only
C3S08	2203-005148	C-CER,CHIP;100nF,10%,16V,X7R,	DVD-V540/AFR Only
C3S09	2401-001324	C-AL;0.47UF,20%,50V,GP,BK,3X5	DVD-V540/AFR Only
C3S10	2401-003107	C-AL;47uF,20%,16V,GP,TP,5x7.5	DVD-V540/AFR Only
C3S11	2203-005148	C-CER,CHIP;100nF,10%,16V,X7R,	DVD-V540/AFR Only
C3S12A	2203-000491	C-CER,CHIP;2.2nF,10%,50V,X7R,	DVD-V540/AFR Only
C3S14	2401-000665	C-AL;2.2uF,20%,50V,GP,TP,3.5x	DVD-V540/AFR Only
C3S14A	2203-000491	C-CER,CHIP;2.2nF,10%,50V,X7R,	DVD-V540/AFR Only
C3S15	2203-000440	C-CER,CHIP;1nF,10%,50V,X7R,TP	DVD-V540/AFR Only
IC3S01	1204-001921	IC-CHROMA;LA70100M,SOP,30P,37	DVD-V540/AFR Only
R3S01	2007-000078	R-CHIP;1Kohm,5%,1/10W,TP,1608	DVD-V540/AFR Only
R3S02	2001-000435	R-CARBON;1MOHM,5%,1/8W,AA,TP,	DVD-V540/AFR Only
A2/NICAM PARTS			
C4N01	2203-000140	C-CER,CHIP;1.5nF,10%,50V,X7R,TP,1608,-	
C4N02	2401-000408	C-AL;10uF,20%,16V,GP,TP,3.5x5,2.5	
C4N03	2203-001607	C-CER,CHIP;0.22nF,5%,50V,NP0,-,1608	
C4N04	2401-000665	C-AL;2.2uF,20%,50V,GP,TP,3.5x5,5	
C4N05	2203-000257	C-CER,CHIP;10nF,10%,50V,X7R,TP,1608	
C4N06	2203-000257	C-CER,CHIP;10nF,10%,50V,X7R,TP,1608	
C4N07	2203-001656	C-CER,CHIP;0.47nF,5%,50V,NP0,TP,1608	
C4N08	2203-000140	C-CER,CHIP;1.5nF,10%,50V,X7R,TP,1608,-	
C4N09	2401-000408	C-AL;10uF,20%,16V,GP,TP,3.5x5,2.5	
C4N10	2401-000408	C-AL;10uF,20%,16V,GP,TP,3.5x5,2.5	
C4N11	2401-002186	C-AL;3.3UF,20%,50V,GP,BK,4X5,2.5	
C4N12	2203-005148	C-CER,CHIP;100nF,10%,16V,X7R,TP,1608	
C4N13	2203-005148	C-CER,CHIP;100nF,10%,16V,X7R,TP,1608	
C4N14	2401-000408	C-AL;10uF,20%,16V,GP,TP,3.5x5,2.5	
C4N15	2203-005148	C-CER,CHIP;100nF,10%,16V,X7R,TP,1608	
C4N16	2401-001502	C-AL;47uF,20%,16V,GP,TP,6.3x5,2.5	
C4N17	2203-001656	C-CER,CHIP;0.47nF,5%,50V,NP0,TP,1608	
C4N18	2203-001656	C-CER,CHIP;0.47nF,5%,50V,NP0,TP,1608	
C4N19	2203-000998	C-CER,CHIP;0.047NF,5%,50V,C0G,TP,1608	
C4N21	2201-002069	C-CERAMIC,DISC,0.0015NF,0.25PF,50V,C0G,T	
C4N22	2201-002069	C-CERAMIC,DISC,0.0015NF,0.25PF,50V,C0G,T	
C4N23	2401-000598	C-AL;1uF,20%,50V,GP,TP,4x7.5	
C4N24	2401-000598	C-AL;1uF,20%,50V,GP,TP,4x7.5	
C4N25	2203-005148	C-CER,CHIP;100nF,10%,16V,X7R,TP,1608	
C4N30	2203-000257	C-CER,CHIP;10nF,10%,50V,X7R,TP,1608	
D4N01	0401-000101	DIODE-SWITCHING;1N4148,75V,150MA,DO-35,T	
D4N02	0401-000101	DIODE-SWITCHING;1N4148,75V,150MA,DO-35,T	
IC4N01	1204-001765	IC-AUDIO PROCESSOR,MSP3417D,PQFP,PQFP,4	
L4N01	2702-000160	INDUCTOR-RADIAL;4.7uH,10%,6.0x6.4mm	
L4N02	2702-000106	INDUCTOR-RADIAL,100uH,10%,6.2x7.4mm	
L4N03	2702-000160	INDUCTOR-RADIAL;4.7uH,10%,6.0x6.4mm	
L4N04	2301-000297	BEAD-AXIAL;25ohm,3.6x1.2x5.7mm,TP,_	
R4N01	2007-000078	R-CHIP;1Kohm,5%,1/10W,TP,1608	
R4N02	2001-000281	R-CARBON;100OHM,5%,1/8W,AA,TP,1.8X3.2MM	
R4N03	2001-000281	R-CARBON;100OHM,5%,1/8W,AA,TP,1.8X3.2MM	
R4N04	2001-000563	R-CARBON;27KOHM,5%,1/8W,AA,TP,1.8X3.2MM	
R4N05	2007-000074	R-CHIP;100ohm,5%,1/10W,TP,1608	
R4N06	2007-000074	R-CHIP;100ohm,5%,1/10W,TP,1608	
X4N01	2801-004096	CRYSTAL-UNIT;18.432MHZ,20PPM,28-AAA,18PF	
OSD/VPS/PDC PARTS			
C6P01	2203-000257	C-CER,CHIP;10nF,10%,50V,X7R,TP,1608	
C6P02	2203-000315	C-CER,CHIP;0.12NF,5%,50V,C0G,TP,1608	
C6P04	2203-000681	C-CER,CHIP;0.027NF,5%,50V,C0G,TP,1608	
C6P05	2203-000681	C-CER,CHIP;0.027NF,5%,50V,C0G,TP,1608	
C6P08	2203-001071	C-CER,CHIP;0.056NF,5%,50V,C0G,TP,1608	
C6P10	2401-000598	C-AL;1uF,20%,50V,GP,TP,4x7.5	
C6P11	2401-000598	C-AL;1uF,20%,50V,GP,TP,4x7.5	
C6P12	2401-002165	C-AL;100uF,20%,16V,GP,TP,6.3x7.5	
C6P13	2203-005148	C-CER,CHIP;100nF,10%,16V,X7R,TP,1608	
C6P15	2203-001140	C-CER,CHIP;68nF,10%,16V,X7R,TP,1608	
D6P01	0401-000101	DIODE-SWITCHING;1N4148,75V,150MA,DO-35,T	
IC6P01	1204-001796	IC-OSD PROCESSOR,LC74759JM-9820,MFP,24P,	
L6P01	2701-000002	INDUCTOR-AXIAL;100UH,10%,4298	
L6P03	2701-000160	INDUCTOR-AXIAL;22uH,5%,2434	
L6P05	2701-000165	INDUCTOR-AXIAL;27uH,5%,2434	
Q6P01	0501-000303	TR-SMALL SIGNAL;KSA733,PNP,250mW,TO-92,T	
Q6P02	0501-000303	TR-SMALL SIGNAL;KSA733,PNP,250mW,TO-92,T	
Q6P04	0501-000398	TR-SMALL SIGNAL;KSC945,NPN,250mW,TO-92,T	
R6P05	2007-000090	R-CHIP;10Kohm,5%,1/10W,TP,1608	
R6P07	2007-000075	R-CHIP;220ohm,5%,1/10W,TP,1608	
R6P08	2001-000005	R-CARBON;390ohm,5%,1/8W,AA,TP,1.8x3.2mm	
R6P09	2007-000124	R-CHIP;2.2Kohm,5%,1/10W,TP,1608	
R6P10	2001-000515	R-CARBON;220OHM,5%,1/8W,AA,TP,1.8X3.2MM	
R6P12	2001-000734	R-CARBON;4.7KOHM,5%,1/8W,AA,TP,1.8X3.2M	
R6P13	2007-000097	R-CHIP;47Kohm,5%,1/10W,TP,1608	
R6P14	2007-000123	R-CHIP;1.5Kohm,5%,1/10W,TP,1608	
INPUT-OUTPUT PARTS			
C812	2401-000922	C-AL;22uF,20%,16V,GP,TP,5x5,5	
C813	2401-000922	C-AL;22uF,20%,16V,GP,TP,5x5,5	
C814	2401-000922	C-AL;22uF,20%,16V,GP,TP,5x5,5	
C815	2401-000922	C-AL;22uF,20%,16V,GP,TP,5x5,5	
C816	2401-002165	C-AL;100uF,20%,16V,GP,TP,6.3x7.5	
C817	2203-000257	C-CER,CHIP;10nF,10%,50V,X7R,TP,1608	
C818	2203-000783	C-CER,CHIP;0.33NF,5%,50V,C0G,TP,1608	
C819	2203-000783	C-CER,CHIP;0.33NF,5%,50V,C0G,TP,1608	
C820	2203-000783	C-CER,CHIP;0.33NF,5%,50V,C0G,TP,1608	
C821	2203-000783	C-CER,CHIP;0.33NF,5%,50V,C0G,TP,1608	
C822A	2203-000236	C-CER,CHIP;0.1NF,5%,50V,C0G,TP,1608	
C823	2203-000783	C-CER,CHIP;0.33NF,5%,50V,C0G,TP,1608	
C824	2203-000783	C-CER,CHIP;0.33NF,5%,50V,C0G,TP,1608	
C825	2203-000783	C-CER,CHIP;0.33NF,5%,50V,C0G,TP,1608	
C826	2203-000783	C-CER,CHIP;0.33NF,5%,50V,C0G,TP,1608	
C835	2401-001479	C-AL;470UF,20%,16V,GP,TP,6.3*11MM,-	
C837	2203-000257	C-CER,CHIP;10nF,10%,50V,X7R,TP,1608	
C840	2203-005148	C-CER,CHIP;100nF,10%,16V,X7R,TP,1608	

C851	2401-000922	C-AL;22uF,20%,16V,GP,TP,5x5.5
C852	2401-000922	C-AL;22uF,20%,16V,GP,TP,5x5.5
C853	2203-000491	C-CER,CHIP,2.2nF,10%,50V,X7R,TP,1608,-
C854	2203-000491	C-CER,CHIP,2.2nF,10%,50V,X7R,TP,1608,-
C857	2203-000698	C-CER,CHIP,4.7nF,10%,50V,X7R,TP,1608
C858	2401-000922	C-AL;22uF,20%,16V,GP,TP,5x5.5
C890	2401-000922	C-AL;22uF,20%,16V,GP,TP,5x5.5
D805	0401-000101	DIODE-SWITCHING;1N4148,75V,150MA,DO-35,T
IC802	0801-002741	IC-CMOS LOGIC,BU4053BCFV,MUX,SSOP,16P,17
J033	2007-000070	R-CHIP;0ohm,5%,1/10W,TP,1608
J330	2007-000070	R-CHIP;0ohm,5%,1/10W,TP,1608
J50A	2007-000070	R-CHIP;0ohm,5%,1/10W,TP,1608
J905	2007-000070	R-CHIP;0ohm,5%,1/10W,TP,1608
J910	2007-000029	R-CHIP;0ohm,5%,1/8W,TP,2012
J911	2007-000029	R-CHIP;0ohm,5%,1/8W,TP,2012
J912	2007-000070	R-CHIP;0ohm,5%,1/10W,TP,1608
J913	2007-000070	R-CHIP;0ohm,5%,1/10W,TP,1608
J914	2007-000029	R-CHIP;0ohm,5%,1/8W,TP,2012
JC801	3722-001573	JACK-SCART;42P/2R - SN,BLK/BLU,#20-28
JC805	AC37-220002N	JACK-PIN;3.2mm,DPAE-9836,3P(1),HI-FI,SV
L803	2701-000181	INDUCTOR-AXIAL;33uH,5%,2434
L804	2701-000181	INDUCTOR-AXIAL;33uH,5%,2434
L805	2701-000181	INDUCTOR-AXIAL;33uH,5%,2434
L807	2701-000181	INDUCTOR-AXIAL;33uH,5%,2434
L808	2701-000181	INDUCTOR-AXIAL;33uH,5%,2434
L809	2701-000181	INDUCTOR-AXIAL;33uH,5%,2434
L810	2701-000181	INDUCTOR-AXIAL;33uH,5%,2434
L811	2701-000181	INDUCTOR-AXIAL;33uH,5%,2434
L812	2701-000181	INDUCTOR-AXIAL;33uH,5%,2434
L814	AC27-820014M	COIL-INDUCTOR;RH3.5X6.5RS,BEAD/RADIAL(-)
L890	2701-000002	INDUCTOR-AXIAL;100UH,10%,4298
Q802	0504-000119	TR-DIGITAL;KSR1004,NPN,300MW,47K/47K,TO-
Q803	0504-000129	TR-DIGITAL;KSR1104,NPN,200mW,47K/47K,SOT
Q804	0504-000142	TR-DIGITAL;KSR2001,PNP,300MW,4.7K/4.7K,T
Q806	0504-000152	TR-DIGITAL;KSR2101,PNP,200mW,4.7K/4.7K,S
Q808	0504-000119	TR-DIGITAL;KSR1004,NPN,300MW,47K/47K,TO-
Q809	0501-000341	TR-SMALL SIGNAL;KSC1623-L,NPN,200mW,SOT-
Q810	0501-000341	TR-SMALL SIGNAL;KSC1623-L,NPN,200mW,SOT-
Q811	0501-000341	TR-SMALL SIGNAL;KSC1623-L,NPN,200mW,SOT-
Q891A	0501-000398	TR-SMALL SIGNAL;KSC945,NPN,250mW,TO-92,T
Q891S	0501-000398	TR-SMALL SIGNAL;KSC945,NPN,250mW,TO-92,T
R801A	2007-000116	R-CHIP;120ohm,5%,1/10W,TP,1608
R802	2007-000079	R-CHIP;1.8Kohm,5%,1/10W,TP,1608
R803	2007-000079	R-CHIP;1.8Kohm,5%,1/10W,TP,1608
R805	2007-000643	R-CHIP;270ohm,5%,1/10W,TP,1608
R80E	2007-000643	R-CHIP;270ohm,5%,1/10W,TP,1608
R807	2007-001134	R-CHIP;68ohm,5%,1/10W,TP,1608
R808	2007-001167	R-CHIP;75ohm,5%,1/10W,TP,1608
R809	2007-001167	R-CHIP;75ohm,5%,1/10W,TP,1608
R810	2007-000643	R-CHIP;270ohm,5%,1/10W,TP,1608
R811	2007-000643	R-CHIP;270ohm,5%,1/10W,TP,1608
R813	2007-000643	R-CHIP;270ohm,5%,1/10W,TP,1608,
R814	2007-000643	R-CHIP;270ohm,5%,1/10W,TP,1608
R815	2007-000643	R-CHIP;270ohm,5%,1/10W,TP,1608
R816	2007-000643	R-CHIP;270ohm,5%,1/10W,TP,1608
R819	2007-000643	R-CHIP;270ohm,5%,1/10W,TP,1608
R820	2007-000643	R-CHIP;270ohm,5%,1/10W,TP,1608
R821	2007-000134	R-CHIP;33Kohm,5%,1/10W,TP,1608
R822	2007-000094	R-CHIP,22Kohm,5%,1/10W,TP,1608
R822E	2007-001167	R-CHIP;75ohm,5%,1/10W,TP,1608
R825	2007-000084	R-CHIP,4.7Kohm,5%,1/10W,TP,1608
R828	2007-000101	R-CHIP;82Kohm,5%,1/10W,TP,1608
R829	2007-000101	R-CHIP;82Kohm,5%,1/10W,TP,1608
R830	2007-000101	R-CHIP;82Kohm,5%,1/10W,TP,1608

R835	2007-000101	R-CHIP;82Kohm,5%,1/10W,TP,1608
R836	2007-000101	R-CHIP;82Kohm,5%,1/10W,TP,1608
R839	2007-000070	R-CHIP;0ohm,5%,1/10W,TP,1608
R841	2007-000119	R-CHIP;560ohm,5%,1/10W,TP,1608
R842	2007-000119	R-CHIP;560ohm,5%,1/10W,TP,1608
R843	2007-000119	R-CHIP;560ohm,5%,1/10W,TP,1608
R844	2007-001167	R-CHIP;75ohm,5%,1/10W,TP,1608
R851	2007-000097	R-CHIP;47Kohm,5%,1/10W,TP,1608
R852	2007-000097	R-CHIP;47Kohm,5%,1/10W,TP,1608
R891A	2007-000090	R-CHIP;10Kohm,5%,1/10W,TP,1608
R891B	2007-000090	R-CHIP;10Kohm,5%,1/10W,TP,1608
R892A	2007-001179	R-CHIP;8.2Kohm,5%,1/10W,TP,1608
R892B	2007-001179	R-CHIP;8.2Kohm,5%,1/10W,TP,1608
R893A	2007-000122	R-CHIP;1.2Kohm,5%,1/10W,TP,1608
R893B	2007-000122	R-CHIP;1.2Kohm,5%,1/10W,TP,1608
R894A	2007-000655	R-CHIP;27Kohm,5%,1/10W,TP,1608
R894B	2007-000655	R-CHIP;27Kohm,5%,1/10W,TP,1608
ZD801	0403-000297	DIODE-ZENER;MTZ6.2B,5.96-6.27V,500MW,DO-
ZD805	0403-001211	DIODE-ZENER;MTZJ12B,11.8-12.3V,500MW,DO-
ZD806	0403-001083	DIODE-ZENER;UDZ9.1B,8.85-9.23V,200MW,UMD
ZD807	0403-001083	DIODE-ZENER;UDZ9.1B,8.85-9.23V,200MW,UMD
ZD809	0403-001083	DIODE-ZENER;UDZ9.1B,8.85-9.23V,200MW,UMD
ZD810	0403-001083	DIODE-ZENER;UDZ9.1B,8.85-9.23V,200MW,UMD
ZD811	0403-000720	DIODE-ZENER;MTZJ5.1B,5.57-9.01V,500MW,DO
ZD851	0403-000720	DIODE-ZENER;MTZJ5.1B,5.57-9.01V,500MW,DO
ZD852	0403-000720	DIODE-ZENER;MTZJ5.1B,5.57-9.01V,500MW,DO
ZD853	0403-000720	DIODE-ZENER;MTZJ5.1B,5.57-9.01V,500MW,DO
ZD854	0403-000720	DIODE-ZENER;MTZJ5.1B,5.57-9.01V,500MW,DO
ZD863	0403-001083	DIODE-ZENER;UDZ9.1B,8.85-9.23V,200MW,UMD
ZD864	0403-000720	DIODE-ZENER;MTZJ5.1B,5.57-9.01V,500MW,DO

DISPLAY/FUNCTION MATRIX PARTS

BD701	3301-001419	BEAD-SMD;-,220,-,500,TP,-,0.3
BD702	3301-001419	BEAD-SMD;-,220,-,500,TP,-,0.3
BD703	3301-001419	BEAD-SMD;-,220,-,500,TP,-,0.3
C701	2401-002165	C-AL;100uF,20%,16V,GP,TP,6.3x7.5
C702	2203-000257	C-CER,CHIP,10nF,10%,50V,X7R,TP,1608
C703	2203-000440	C-CER,CHIP,1nF,10%,50V,X7R,TP,1608,-
C705	2203-000239	C-CER,CHIP,0.1NF,5%,50V,C0G,TP,2012
C707	2401-001992	C-AL;2200UF,20%,10WVT,TP,10X20MM,5
C708A	2203-000257	C-CER,CHIP,10nF,10%,50V,X7R,TP,1608
C712	2203-000491	C-CER,CHIP,2.2nF,10%,50V,X7R,TP,1608,-
C714	2203-000491	C-CER,CHIP,2.2nF,10%,50V,X7R,TP,1608,-
CN701	3710-001918	CONNECTOR-SOCKET;6P,1R,2MM,ANGLE,SN
CN701A	3711-005312	CONNECTOR-HEADER;2WALL,6P,1R,2MM,STRAIGH
D701	0401-000101	DIODE-SWITCHING;1N4148,75V,150MA,DO-35,T
D702	0401-000101	DIODE-SWITCHING;1N4148,75V,150MA,DO-35,T
D703	0401-000101	DIODE-SWITCHING;1N4148,75V,150MA,DO-35,T
D704	0401-000101	DIODE-SWITCHING;1N4148,75V,150MA,DO-35,T
D705	0401-000101	DIODE-SWITCHING;1N4148,75V,150MA,DO-35,T
DT701	AC37-00065A	LED DISPLAY;BCD-9027E_SV-DVD440,5-DIGIT,
IC701	1003-001551	IC-LED DRIVER;PT6961,SOP,32P,300MIL,-,40
JK701	3722-001943	JACK-PIN;3P,B,3P,NF,BLK,-
L701	2701-000002	INDUCTOR-AXIAL;100UH,10%,4298
L702	2701-000002	INDUCTOR-AXIAL;100UH,10%,4298
R701	2001-000429	R-CARBON;1KOHM,5%,1/8W,AA,TP,*,BX3.2MM
R702	2007-000078	R-CHIP;1Kohm,5%,1/10W,TP,1608
R723	2007-000078	R-CHIP;1Kohm,5%,1/10W,TP,1608
R704	2001-000637	R-CARBON;51KOHM,5%,1/8W,AA,TP,*,BX3.2MM
R711	2007-000090	R-CHIP;10Kohm,5%,1/10W,TP,1608
R712	2007-001167	R-CHIP;75ohm,5%,1/10W,TP,1608
RM701	AC32-00006A	MODULE REMOCON;TSOP2238WE1,38KHZ,-,5.08m
SW701	3404-001182	SWITCH-TACT;DC12V,50MA,100GF,6.0X6.0X5.0
SW702	3404-001182	SWITCH-TACT;DC12V,50MA,100GF,6.0X6.0X5.0
SW703	3404-001182	SWITCH-TACT;DC12V,50MA,100GF,6.0X6.0X5.0
SW704	3404-001182	SWITCH-TACT;DC12V,50MA,100GF,6.0X6.0X5.0

SW705	3404-001182	SWITCH-TACT;DC12V,50MA,100GF,6.0X6.0X5.0
SW707	3404-001182	SWITCH-TACT;DC12V,50MA,100GF,6.0X6.0X5.0
SW708	3404-001182	SWITCH-TACT;DC12V,50MA,100GF,6.0X6.0X5.0
SW709	3404-001182	SWITCH-TACT;DC12V,50MA,100GF,6.0X6.0X5.0
SW710	3404-001182	SWITCH-TACT;DC12V,50MA,100GF,6.0X6.0X5.0
SW713	3404-001182	SWITCH-TACT;DC12V,50MA,100GF,6.0X6.0X5.0
SW714	3404-001182	SWITCH-TACT;DC12V,50MA,100GF,6.0X6.0X5.0
SW715	3404-001182	SWITCH-TACT;DC12V,50MA,100GF,6.0X6.0X5.0
SW716	3404-001182	SWITCH-TACT;DC12V,50MA,100GF,6.0X6.0X5.0
W735	2202-002037	C-CERAMIC,MLC-AXIAL;100nF,80-20%,50V,Y5V
W737	2202-002037	C-CERAMIC,MLC-AXIAL;100nF,80-20%,50V,Y5V
ZD701	0403-000720	DIODE-ZENER;MTZJ5.1B,5.57-9.01V,500MW,DO

B02	**AK92-00414A**	**ASSY PCB-DVD;DVD-V1000R,DVD KAISER**	**SV-DVD340 Only**
	AK92-00247D	**ASSY PCB-MAIN;DVD-V90K/MI03**	**SV-DVD540A/545 Only**
	AK92-00436A	**ASSY PCB-DVD;SV-DVD640,KAISER**	**SV-DVD640 Only**
AC14	2203-001607	C-CER,CHIP,0.22nF,5%,50V,NP0,-,1608	
AC15	2203-005148	C-CER,CHIP,100nF,10%,16V,X7R,TP,1608	
AC18	2203-005148	C-CER,CHIP,100nF,10%,16V,X7R,TP,1608	
AC19	2203-005148	C-CER,CHIP,100nF,10%,16V,X7R,TP,1608	
AC20	2203-005148	C-CER,CHIP,100nF,10%,16V,X7R,TP,1608	
AC21	2203-000315	C-CER,CHIP,0.12NF,5%,50V,C0G,TP,1608	
AC22	2203-005148	C-CER,CHIP,100nF,10%,16V,X7R,TP,1608	
AC25	2203-000315	C-CER,CHIP,0.12NF,5%,50V,C0G,TP,1608	
AC26	2203-000125	C-CER,CHIP,1.2nF,10%,50V,X7R,TP,1608,-	
AC27	2203-005148	C-CER,CHIP,100nF,10%,16V,X7R,TP,1608	
AC4	2203-005148	C-CER,CHIP,100nF,10%,16V,X7R,TP,1608	
AC5	2203-000125	C-CER,CHIP,1.2nF,10%,50V,X7R,TP,1608,-	
AC9	2203-001607	C-CER,CHIP,0.22nF,5%,50V,NP0,-,1608	
ACC1	2203-005148	C-CER,CHIP,100nF,10%,16V,X7R,TP,1608	
ACC2	2203-005148	C-CER,CHIP,100nF,10%,16V,X7R,TP,1608	
AD1	0407-000114	DIODE-ARRAY;DAN202K,80V,100mA,CA2-3,SOT-	
AD2	0407-000114	DIODE-ARRAY;DAN202K,80V,100mA,CA2-3,SOT-	
AD40	0407-000116	DIODE-ARRAY;DAP202K,80V,100mA,CK2-3,SOT-	
AE10	2401-002165	C-AL;100uF,20%,16V,GP,TP,6.3x7.5	
AE11	2401-000922	C-AL;22uF,20%,16V,GP,TP,5x5.5	
AE14	2401-003107	C-AL;47uF,20%,16V,GP,TP,5x7.5	
AE3	2401-000909	C-AL;22uF,20%,16V,GP,TP,5x5.2.5	
AE4	2401-003107	C-AL;47uF,20%,16V,GP,TP,5x7.5	
AE5	2401-000922	C-AL;22uF,20%,16V,GP,TP,5x5.5	
AE8	2401-002165	C-AL;100uF,20%,16V,GP,TP,6.3x7.5	
AE9	2401-002165	C-AL;100uF,20%,16V,GP,TP,6.3x7.5	
AEE1	2401-000922	C-AL;22uF,20%,16V,GP,TP,5x5.5	
AEE2	2401-000922	C-AL;22uF,20%,16V,GP,TP,5x5.5	
AEE50	2401-000922	C-AL;22uF,20%,16V,GP,TP,5x5.5	
AEE51	2401-000922	C-AL;22uF,20%,16V,GP,TP,5x5.5	
AIC2	1002-001294	IC-D/A CONVERTER;PCM1742KE,24BIT,TSSOP,1	
AIC4	1201-000163	IC-OP AMP;4560,SOP,8P,173MIL,DUAL,100V/m	
AIC5	1201-000163	IC-OP AMP;4560,SOP,8P,173MIL,DUAL,100V/m	
AL1	3301-001419	BEAD-SMD;-,220,-,500,TP,-,0.3	
AL2	3301-001419	BEAD-SMD;-,220,-,500,TP,-,0.3	
AL3	3301-001419	BEAD-SMD;-,220,-,500,TP,-,0.3	
AL4	3301-001419	BEAD-SMD;-,220,-,500,TP,-,0.3	
AQ1	0504-000128	TR-DIGITAL;-,NPN,200MW,22K/22K,SOT-23,TP	
AQ2	0504-000156	TR-DIGITAL;KSR2103,PNP,200MW,22K/22K,SOT	
AQ20	0504-000128	TR-DIGITAL;-,NPN,200MW,22K/22K,SOT-23,TP	
AQ21	0504-000156	TR-DIGITAL;KSR2103,PNP,200MW,22K/22K,SOT	
AQ3	0501-000341	TR-SMALL SIGNAL;KSC1623-L,NPN,200mW,SOT-	
AQ4	0504-000128	TR-DIGITAL;-,NPN,200MW,22K/22K,SOT-23,TP	
AQ40	0501-000341	TR-SMALL SIGNAL;KSC1623-L,NPN,200mW,SOT-	
AQ41	0501-000341	TR-SMALL SIGNAL;KSC1623-L,NPN,200mW,SOT-	
AQ5	0504-000156	TR-DIGITAL;KSR2103,PNP,200MW,22K/22K,SOT	
AQ6	0501-000341	TR-SMALL SIGNAL;KSC1623-L,NPN,200mW,SOT-	
AR1	2007-000102	R-CHIP;100Kohm,5%,1/10W,TP,1608	
AR14	2007-000090	R-CHIP;10Kohm,5%,1/10W,TP,1608	
AR15	2007-000075	R-CHIP;220ohm,5%,1/10W,TP,1608	
AR16	2007-000075	R-CHIP;220ohm,5%,1/10W,TP,1608	
AR17	2007-000076	R-CHIP;1Kohm,5%,1/10W,TP,1608	
AR18	2007-000075	R-CHIP;220ohm,5%,1/10W,TP,1608	
AR26	2007-000090	R-CHIP;10Kohm,5%,1/10W,TP,1608	
AR29	2007-000075	R-CHIP;220ohm,5%,1/10W,TP,1608	
AR3	2007-000102	R-CHIP;100Kohm,5%,1/10W,TP,1608	
AR30	2007-000075	R-CHIP;220ohm,5%,1/10W,TP,1608	
AR31	2007-000076	R-CHIP;1Kohm,5%,1/10W,TP,1608	
AR32	2007-000075	R-CHIP;220ohm,5%,1/10W,TP,1608	
AR35	2007-000074	R-CHIP;100ohm,5%,1/10W,TP,1608	
AR40	2007-000074	R-CHIP;100ohm,5%,1/10W,TP,1608	
AR41	2007-001179	R-CHIP;8.2Kohm,5%,1/10W,TP,1608	
AR42	2007-000082	R-CHIP;3.3Kohm,5%,1/10W,TP,1608	

AR43	2007-000092	R-CHIP;15Kohm,5%,1/10W,TP,1608	
AR46	2007-001179	R-CHIP;8.2Kohm,5%,1/10W,TP,1608	
AR47	2007-000092	R-CHIP;3.3Kohm,5%,1/10W,TP,1608	
AR48	2007-000092	R-CHIP;15Kohm,5%,1/10W,TP,1608	
AR49	2007-000102	R-CHIP;100Kohm,5%,1/10W,TP,1608	
AR50	2007-000102	R-CHIP;100Kohm,5%,1/10W,TP,1608	
AR51	2007-000939	R-CHIP;47Kohm,1%,1/10W,TP,1608	
AR52	2007-000939	R-CHIP;47Kohm,1%,1/10W,TP,1608	
AR53	2007-000939	R-CHIP;47Kohm,1%,1/10W,TP,1608	
AR54	2007-000939	R-CHIP;47Kohm,1%,1/10W,TP,1608	
AR540	2007-000078	R-CHIP;1Kohm,5%,1/10W,TP,1608	
AR541	2007-000078	R-CHIP;1Kohm,5%,1/10W,TP,1608	
AR55	2007-000102	R-CHIP;100Kohm,5%,1/10W,TP,1608	
AR550	2007-000090	R-CHIP;10Kohm,5%,1/10W,TP,1608	
AR551	2007-000090	R-CHIP;10Kohm,5%,1/10W,TP,1608	
AR56	2007-000102	R-CHIP;100Kohm,5%,1/10W,TP,1608	
AZ1	0403-001083	DIODE-ZENER;UDZ9.1B,8.65-9.23V,200MW,UMD	
AZ2	0403-001083	DIODE-ZENER;UDZ9.1B,8.65-9.23V,200MW,UMD	
AZ3	0403-001083	DIODE-ZENER;UDZ9.1B,8.65-9.23V,200MW,UMD	
AZ4	0403-001083	DIODE-ZENER;UDZ9.1B,8.65-9.23V,200MW,UMD	
BD01	3301-001419	BEAD-SMD;-,220,-,500,TP;-,0.3	
BD02	3301-001419	BEAD-SMD;-,220,-,500,TP;-,0.3	
C10	2203-000681	C-CER,CHIP;0.027NF,5%,50V,C0G,TP,1608	
C7	2203-005148	C-CER,CHIP;100nF,10%,16V,X7R,TP,1608	
C8	2203-005148	C-CER,CHIP;100nF,10%,16V,X7R,TP,1608	
C9	2203-000681	C-CER,CHIP;0.027NF,5%,50V,C0G,TP,1608	
CC1	2203-000440	C-CER,CHIP;1nF,10%,50V,X7R,TP,1608,-	
CC10	2203-005065	C-CER,CHIP;1000nF,+80-20%,10V,Y5V,-,1608	
CC12	2203-005065	C-CER,CHIP;1000nF,+80-20%,10V,Y5V,-,1608	
CC13	2203-005148	C-CER,CHIP;100nF,10%,16V,X7R,TP,1608	
CC14	2203-005148	C-CER,CHIP;100nF,10%,16V,X7R,TP,1608	
CC15	2203-005148	C-CER,CHIP;100nF,10%,16V,X7R,TP,1608	
CC17	2203-001103	C-CER,CHIP;6.8nF,10%,50V,X7R,TP,1608,-	
CC2	2203-000440	C-CER,CHIP;1nF,10%,50V,X7R,TP,1608,-	
CC20	2203-005065	C-CER,CHIP;1000nF,+80-20%,10V,Y5V,-,1608	
CC21	2203-000975	C-CER,CHIP;47nF,10%,25V,X7R,TP,1608,-	
CC22	2203-005148	C-CER,CHIP;100nF,10%,16V,X7R,TP,1608	
CC23	2203-001052	C-CER,CHIP;0.56nF,10%,50V,X7R,TP,1608	
CC24	2203-005148	C-CER,CHIP;100nF,10%,16V,X7R,TP,1608	
CC25	2203-000998	C-CER,CHIP;0.047NF,5%,50V,C0G,TP,1608	
CC26	2203-005148	C-CER,CHIP;100nF,10%,16V,X7R,TP,1608	
CC27	2203-005148	C-CER,CHIP;100nF,10%,16V,X7R,TP,1608	
CC28	2203-005221	C-CER,CHIP;15nF,10%,50V,X7R,TP,1608,-	
CC3	2203-000440	C-CER,CHIP;1nF,10%,50V,X7R,TP,1608,-	
CC30	2203-001052	C-CER,CHIP;0.56nF,10%,50V,X7R,TP,1608	
CC31	2203-005221	C-CER,CHIP;15nF,10%,50V,X7R,TP,1608,-	
CC32	2203-005221	C-CER,CHIP;15nF,10%,50V,X7R,TP,1608,-	
CC33	2203-001052	C-CER,CHIP;0.56nF,10%,50V,X7R,TP,1608	
CC34	2203-005148	C-CER,CHIP;100nF,10%,16V,X7R,TP,1608	
CC35	2203-000815	C-CER,CHIP;0.033NF,5%,50V,C0G,TP,1608	
CC36	2203-000815	C-CER,CHIP;0.033NF,5%,50V,C0G,TP,1608	
CC37	2203-000815	C-CER,CHIP;0.033NF,5%,50V,C0G,TP,1608	
CC4	2203-000440	C-CER,CHIP;1nF,10%,50V,X7R,TP,1608,-	
CC5	2203-000189	C-CER,CHIP;100nF,+80-20%,25V,Y5V,TP,1608	
CC9	2401-001250	C-AL;4.7uF,20%,35V,GP,TP,4x5.5	
CCC01	2203-005148	C-CER,CHIP;100nF,10%,16V,X7R,TP,1608	
CCC02	2203-005148	C-CER,CHIP;100nF,10%,16V,X7R,TP,1608	
CCC03	2203-005148	C-CER,CHIP;100nF,10%,16V,X7R,TP,1608	
CCC04	2203-005148	C-CER,CHIP;100nF,10%,16V,X7R,TP,1608	
CCC05	2203-005148	C-CER,CHIP;100nF,10%,16V,X7R,TP,1608	
CCC06	2203-005148	C-CER,CHIP;100nF,10%,16V,X7R,TP,1608	
CCC07	2203-005148	C-CER,CHIP;100nF,10%,16V,X7R,TP,1608	
CCC08	2401-001479	C-AL;470UF,20%,10V,GP,TP,6.3*11MM,-	
CCC09	2203-005148	C-CER,CHIP;100nF,10%,16V,X7R,TP,1608	
CCC10	2401-001479	C-AL;470UF,20%,10V,GP,TP,6.3*11MM,-	
CCC13	2401-002144	C-AL;47uF,20%,16V,GP,TP,5x11.5	

CCC15	2203-005148	C-CER,CHIP;100nF,10%,16V,X7R,TP,1608	
CCC16	2203-005148	C-CER,CHIP;100nF,10%,16V,X7R,TP,1608	
CCC17	2203-005148	C-CER,CHIP;100nF,10%,16V,X7R,TP,1608	
CCC18	2203-005148	C-CER,CHIP;100nF,10%,16V,X7R,TP,1608	
CCC19	2203-005148	C-CER,CHIP;100nF,10%,16V,X7R,TP,1608	
CCC20	2203-005148	C-CER,CHIP;100nF,10%,16V,X7R,TP,1608	
CCC21	2203-005148	C-CER,CHIP;100nF,10%,16V,X7R,TP,1608	
CCC22	2203-005148	C-CER,CHIP;100nF,10%,16V,X7R,TP,1608	
CCC23	2203-005148	C-CER,CHIP;100nF,10%,16V,X7R,TP,1608	
CJ300	2007-000033	R-CHIP;0ohm,5%,1/4W,TP,3216	
CN41	3710-002050	CONNECTOR-SOCKET;12P,1R,2mm,STRAIGHT,SN,	
CN42	3710-002050	CONNECTOR-SOCKET;12P,1R,2mm,STRAIGHT,SN,	
CNL1	3301-001419	BEAD-SMD;-,220,-,500,TP;-,0.3	Not used SV-DVD340
CNL2	3301-001419	BEAD-SMD;-,220,-,500,TP;-,0.3	
DAB01	3301-001419	BEAD-SMD;-,220,-,500,TP;-,0.3	
DAC2	2203-005148	C-CER,CHIP;100nF,10%,16V,X7R;	Not used SV-DVD340
DAC4	2203-005148	C-CER,CHIP;100nF,10%,16V,X7R,TP,1608	
DAE2	2401-000598	C-AL;1uF,20%,50V,GP,TP,4x7.5	Not used SV-DVD340
DAL1	2703-000298	INDUCTOR-SMD;10uH,10%,3225	Not used SV-DVD340
DAL3	2901-001273	FILTER-EMI SMD;50V,2A,-,220pF,3.2x1.6x0.	
DAR1	2007-000402	R-CHIP;150ohm,5%,1/10W,TP,1608	
DAR2	2007-000402	R-CHIP;150ohm,5%,1/10W,TP,1608	
DAR3	2007-000075	R-CHIP;220ohm,5%,1/10W,TP,160	Not used SV-DVD340
DAR24	2007-000070	R-CHIP;0ohm,5%,1/10W,TP,1608	
DAZ1	0403-001083	DIODE-ZENER;UDZ9.1B,8.65-9.23V,200MW,UMD	
DAZ2	0403-001083	DIODE-ZENER;UDZ9.1B,8.65-9.23V,200MW,UMD	
DCON1	3708-001266	CONNECTOR-FPC,FFC/PIC,11P,1MM,STRAIGHT,S	
DCON3	3708-001656	CONNECTOR-FPC,FFC/PIC,24P,1MM,STRAIGHT,S	
DIC2	1107-001369	IC-FLASH MEMORY,29LV800,1Mx8/512Kx16,TSO	
DIC3	1103-001204	IC-EEPROM;24C02,256x8,SOP,8P,5.13x3.95m	
	1103-001134	IC-EEPROM;24C040,512x8,SOP,8P,	SV-DVD640 Only
DIC4	0801-002701	IC-CMOS LOGIC;74VHCT125A,BUFFER,TSSOP,14	
DIC5	1105-001513	IC-DRAM;IS42S16400A-7T,1Mx16bitx4Bit,T	
DJP10	2007-000078	R-CHIP;1Kohm,5%,1/10W,TP,1608	
DJP11	2007-000078	R-CHIP;1Kohm,5%,1/10W,TP,1608	
DJP2	2007-000078	R-CHIP;1Kohm,5%,1/10W,TP,1608	
DOIC2	3707-001065	CONNECTOR-OPTICAL,PLUG,GP1FA5	Not used SV-DVD340
DY1	2801-004279	CRYSTAL-UNIT,27.000MHz,10ppm,28-AAA,20pF,	
ECC1	2203-005148	C-CER,CHIP;100nF,10%,16V,X7R,TP,1608	
ECC2	2203-005148	C-CER,CHIP;100nF,10%,16V,X7R,TP,1608	
FB2	3301-001419	BEAD-SMD;-,220,-,500,TP;-,0.3	
JACK1	3722-002128	JACK-PIN;3P,SNI/NI,RED/WHT/BLK,ANGLE	
JL1	3301-001419	BEAD-SMD;-,220,-,500,TP;-,0.3	
JL2	3301-001419	BEAD-SMD;-,220,-,500,TP;-,0.3	
LDD1	0407-000116	DIODE-ARRAY;DAP202K,80V,100mA,CK2-3,SOT-	
LDD2	0407-000116	DIODE-ARRAY;DAP202K,80V,100mA,CK2-3,SOT-	
LDQ1	0501-000341	TR-SMALL SIGNAL,KSC1623-L,NPN,200mW,SOT-	
LDQ2	0501-000341	TR-SMALL SIGNAL,KSC1623-L,NPN,200mW,SOT-	
LDQ3	0501-000341	TR-SMALL SIGNAL,KSC1623-L,NPN,200mW,SOT-	
LDR1	2007-000090	R-CHIP;10Kohm,5%,1/10W,TP,1608	
LDR2	2007-000090	R-CHIP;10Kohm,5%,1/10W,TP,1608	
LDR3	2007-000539	R-CHIP;200ohm,5%,1/10W,TP,1608	
LDR4	2007-000090	R-CHIP;10Kohm,5%,1/10W,TP,1608	
LDR5	2007-000090	R-CHIP;10Kohm,5%,1/10W,TP,1608	
LDR6	2007-000070	R-CHIP;0ohm,5%,1/10W,TP,1608	
LPC2	2203-000440	C-CER,CHIP;1nF,10%,50V,X7R,TP,1608,-	
LPC3	2203-000440	C-CER,CHIP;1nF,10%,50V,X7R,TP,1608,-	
LPC4	2203-005148	C-CER,CHIP;100nF,10%,16V,X7R,TP,1608	
LPE1	2401-002165	C-AL;100uF,20%,16V,GP,TP,6.3x7.5	
LPE2	2401-002165	C-AL;100uF,20%,16V,GP,TP,6.3x7.5	
LPR1	2007-000312	R-CHIP;10ohm,5%,1/4W,TP,3216	
LPR2	2007-000965	R-CHIP;5.1Kohm,5%,1/10W,TP,1608	
LPR3	2007-000078	R-CHIP;1Kohm,5%,1/10W,TP,1608	
LPR4	2007-000312	R-CHIP;10ohm,5%,1/4W,TP,3216	
MC1	2203-005148	C-CER,CHIP;100nF,10%,16V,X7R,TP,1608	
MC3	2203-005148	C-CER,CHIP;100nF,10%,16V,X7R,TP,1608	

MC4	2203-005148	C-CER,CHIP;100nF,10%,16V,X7R,TP,1608	
MC5	2203-005148	C-CER,CHIP;100nF,10%,16V,X7R,TP,1608	
MCE1	2401-003107	C-AL;47uF,20%,16V,GP,TP,5x7.5	
MCE2	2401-003107	C-AL;47uF,20%,16V,GP,TP,5x7.5	
MCE3	2401-003107	C-AL;47uF,20%,16V,GP,TP,5x7.5	
MD1	0407-000114	DIODE-ARRAY;DAN202K,80V,100mA,CA2-3,SOT-	
MIC1	1003-001661	IC-MOTOR DRIVER;FAN8004,HOPF,48P,13.2x13	
MIC2	1201-001842	IC-OP AMP;TL3472CD,SO,TP,8P,-,DUAL,-,PAL	
MPE1	2401-002165	C-AL;100uF,20%,16V,GP,TP,6.3x7.5	
MR1	2007-000090	R-CHIP;10Kohm,5%,1/10W,TP,1608	
MR10	2007-000084	R-CHIP;4.7Kohm,5%,1/10W,TP,1608	
MR11	2007-000090	R-CHIP;10Kohm,5%,1/10W,TP,1608	
MR12	2007-000109	R-CHIP;1Mohm,5%,1/10W,TP,1608	
MR13	2007-000094	R-CHIP;22Kohm,5%,1/10W,TP,1608	
MR14	2007-000094	R-CHIP;22Kohm,5%,1/10W,TP,1608	
MR15	2007-000090	R-CHIP;10Kohm,5%,1/10W,TP,1608	
MR16	2007-000123	R-CHIP;1.5Kohm,5%,1/10W,TP,1608	
MR17	2007-000090	R-CHIP;10Kohm,5%,1/10W,TP,1608	
MR18	2007-000123	R-CHIP;1.5Kohm,5%,1/10W,TP,1608	
MR2	2007-000090	R-CHIP;10Kohm,5%,1/10W,TP,1608	
MR25	2007-000094	R-CHIP;22Kohm,5%,1/10W,TP,1608	
MR26	2007-000090	R-CHIP;10Kohm,5%,1/10W,TP,1608	
MR3	2007-000081	R-CHIP;2.7Kohm,5%,1/10W,TP,1608	
MR4	2007-000092	R-CHIP;15Kohm,5%,1/10W,TP,1608	
MR5	2007-000092	R-CHIP;15Kohm,5%,1/10W,TP,1608	
MR6	2007-000093	R-CHIP;20Kohm,5%,1/10W,TP,1608	
MR7	2007-000092	R-CHIP;15Kohm,5%,1/10W,TP,1608	
MR8	2007-000090	R-CHIP;10Kohm,5%,1/10W,TP,1608	
MR9	2007-000127	R-CHIP;8.1Kohm,5%,1/10W,TP,1608	
MTR4	2007-000070	R-CHIP;0ohm,5%,1/10W,TP,1608	
MTR5	2007-000070	R-CHIP;0ohm,5%,1/10W,TP,1608	
MTR6	2007-000070	R-CHIP;0ohm,5%,1/10W,TP,1608	
opr10	2007-000123	R-CHIP;1.5Kohm,5%,1/10W,TP,1608	
OPR11	2007-000083	R-CHIP;3Kohm,5%,1/10W,TP,1608	
OPR13	2007-000070	R-CHIP;0ohm,5%,1/10W,TP,1608	
PAC10	2203-005148	C-CER,CHIP;100nF,10%,16V,X7R,TP,1608	
PAE11	2401-002165	C-AL;100uF,20%,16V,GP,TP,6.3x7.5	
PL2	2703-000398	INDUCTOR-SMD;10uH,10%,3225	
PPB01	3301-001419	BEAD-SMD;-,220,-,500,TP;-,0.3	
PPC1	2203-000257	C-CER,CHIP;1nF,10%,50V,X7R,TP,1608	
PPC118	2203-005148	C-CER,CHIP;100nF,10%,16V,X7R,TP,1608	
PPC2	2203-000257	C-CER,CHIP;1nF,10%,50V,X7R,TP,1608	
PPC3	2203-000257	C-CER,CHIP;1nF,10%,50V,X7R,TP,1608	
PPC80	2203-005148	C-CER,CHIP;100nF,10%,16V,X7R,TP,1608	
PPC81	2203-005148	C-CER,CHIP;100nF,10%,16V,X7R,TP,1608	
PPC82	2203-005148	C-CER,CHIP;100nF,10%,16V,X7R,TP,1608	
PPE1	2401-002165	C-AL;100uF,20%,16V,GP,TP,6.3x7.5	
PPE110	2401-002144	C-AL;47uF,20%,16V,GP,TP,5x11.5	
PPE18	2401-001479	C-AL;470UF,20%,10V,GP,TP,6.3*11MM,-	
PPE2	2401-002165	C-AL;100uF,20%,16V,GP,TP,6.3x7.5	
PPE25	2401-002144	C-AL;47uF,20%,16V,GP,TP,5x11.5	
PPE3	2401-002165	C-AL;100uF,20%,16V,GP,TP,6.3x7.5	
PPE4	2401-003107	C-AL;47uF,20%,16V,GP,TP,5x7.5	
PPIC2	1203-003132	IC-POSI.ADJUST REG.;AMC1117,SOT-223,3P,6	
PPIC3	1203-003216	IC-POSI.FIXED REG.;G9133,TO-220F,4P,10.1	
PPIC5	1203-000293	IC-POSI.FIXED REG.;7808,TO-220,3P,-,PLAS	
PPL10	2703-000398	INDUCTOR-SMD;10uH,10%,3225	
PPL12	2007-000033	R-CHIP;0ohm,5%,1/4W,TP,3216	
PPL2	2007-000033	R-CHIP;0ohm,5%,1/4W,TP,3216	
PPL80	2007-000070	R-CHIP;0ohm,5%,1/10W,TP,1608	
PPR1	2007-000033	R-CHIP;0ohm,5%,1/4W,TP,3216	
PPR2	2007-000343	R-CHIP;120ohm,1%,1/10W,TP,1608	
PPR3	2007-000074	R-CHIP;100ohm,5%,1/10W,TP,1608	
QLP1	0501-000279	TR-SMALL SIGNAL,KSA1182-Y,PNP,150mW,SOT-	
QLP2	0501-000279	TR-SMALL SIGNAL,KSA1182-Y,PNP,150mW,SOT-	
R10	2007-000084	R-CHIP;4.7Kohm,5%,1/10W,TP,1608	

R13	2007-000118	R-CHIP;390ohm,5%,1/10W,TP,1608	
R36	2007-000113	R-CHIP;33ohm,5%,1/10W,TP,1608	
R38	2007-000113	R-CHIP;33ohm,5%,1/10W,TP,1608	
R39	2007-000113	R-CHIP;33ohm,5%,1/10W,TP,1608	
R40	2007-000113	R-CHIP;33ohm,5%,1/10W,TP,1608	
R41	2007-000113	R-CHIP;33ohm,5%,1/10W,TP,1608	
R42	2007-000102	R-CHIP;100Kohm,5%,1/10W,TP,1608	
R46	2007-000113	R-CHIP;33ohm,5%,1/10W,TP,1608	
R47	2007-000113	R-CHIP;33ohm,5%,1/10W,TP,1608	
R7	2007-000084	R-CHIP;4.7Kohm,5%,1/10W,TP,1608	
R73	2007-000084	R-CHIP;4.7Kohm,5%,1/10W,TP,1608	
R8	2007-000084	R-CHIP;4.7Kohm,5%,1/10W,TP,1608	
R9	2007-000084	R-CHIP;4.7Kohm,5%,1/10W,TP,1608	
RAR11	2007-000070	R-CHIP;0ohm,5%,1/10W,TP,1608	
RC1	2203-005148	C-CER,CHIP;100nF,10%,16V,X7R,TP,1608	
RC12	2203-005148	C-CER,CHIP;100nF,10%,16V,X7R,TP,1608	
RC14	2203-005148	C-CER,CHIP;100nF,10%,16V,X7R,TP,1608	
RC19	2203-000315	C-CER,CHIP;0.12NF,5%,50V,C0G,TP,1608	
RC20	2203-000491	C-CER,CHIP;2.2nF,10%,50V,X7R,TP,1608,-	
RC21	2203-000491	C-CER,CHIP;2.2nF,10%,50V,X7R,TP,1608,-	
RC22	2203-000975	C-CER,CHIP;47nF,10%,25V,X7R,TP,1608,-	
RC23	2203-000491	C-CER,CHIP;2.2nF,10%,50V,X7R,TP,1608,-	
RC24	2203-005148	C-CER,CHIP;100nF,10%,16V,X7R,TP,1608	
RC25	2203-000491	C-CER,CHIP;2.2nF,10%,50V,X7R,TP,1608,-	
RC28	2203-001222	C-CER,CHIP;0.82NF,10%,50V,X7R,TP,1608	
RC29	2203-000257	C-CER,CHIP;1nF,10%,50V,X7R,TP,1608	
RC30	2203-000257	C-CER,CHIP;1nF,10%,50V,X7R,TP,1608	
RC31	2203-005148	C-CER,CHIP;100nF,10%,16V,X7R,TP,1608	
RC32	2203-001656	C-CER,CHIP;0.47nF,5%,50V,NP0,TP,1608	
RC33	2203-001656	C-CER,CHIP;0.47nF,5%,50V,NP0,TP,1608	
RC34	2203-000440	C-CER,CHIP;1nF,10%,50V,X7R,TP,1608,-	
RC35	2203-005148	C-CER,CHIP;100nF,10%,16V,X7R,TP,1608	
RC36	2203-000888	C-CER,CHIP;4.7nF,10%,50V,X7R,TP,1608	
RC37	2203-000888	C-CER,CHIP;4.7nF,10%,50V,X7R,TP,1608	
RC6	2203-000257	C-CER,CHIP;1nF,10%,50V,X7R,TP,1608	
RC7	2203-001634	C-CER,CHIP;33nF,10%,50V,X7R,TP,1608,F,Sm	
RC8	2203-000405	C-CER,CHIP;0.18NF,5%,50V,C0G,TP,1608	
RC9	2203-000560	C-CER,CHIP;220nF,+80-20%,25V,Y5V,TP,1606	
RCL23	3391-000314	BEAD-SMD;120ohm,1.6x0.8x0.8mm,150mA,...	
RE10	2401-001479	C-AL;470UF,20%,10V,GP,TP,6.3*11MM,-	
RIC1	1204-002223	IC-RF CIRCUIT;ES6602S,LQFP,64P,1.0x10mm,P	
RL1	2703-000398	INDUCTOR-SMD,10uH,10%,3225	
RL2	2703-000398	INDUCTOR-SMD,10uH,10%,3225	
RN1	2011-000475	R-NET;330HM,5%,1/16W,L,CHIP,8P,TP,32	
RN2	2011-000475	R-NET;330HM,5%,1/16W,L,CHIP,8P,TP,32	
RN3	2011-000475	R-NET;330HM,5%,1/16W,L,CHIP,8P,TP,32	
ROC1	2203-005148	C-CER,CHIP;100nF,10%,16V,X7R,TP,1608	
RORZ	2007-000070	R-CHIP;0ohm,5%,1/10W,TP,1608	
RR11	2007-000070	R-CHIP;0ohm,5%,1/10W,TP,1608	
RR15	2007-000134	R-CHIP;33Kohm,5%,1/10W,TP,1608	
RR16	2007-000122	R-CHIP;1.2Kohm,5%,1/10W,TP,1608	
RR17	2007-000090	R-CHIP;10Kohm,5%,1/10W,TP,1608	
RR18	2007-000965	R-CHIP;5.1Kohm,5%,1/10W,TP,1608	
RR19	2007-000070	R-CHIP;0ohm,5%,1/10W,TP,1608	
RR20	2007-000070	R-CHIP;0ohm,5%,1/10W,TP,1608	
RR21	2007-000087	R-CHIP;6.8Kohm,5%,1/10W,TP,1608	
RR22	2007-000087	R-CHIP;6.8Kohm,5%,1/10W,TP,1608	
RR24	2007-000087	R-CHIP;6.8Kohm,5%,1/10W,TP,1608	
RR25	2007-000087	R-CHIP;6.8Kohm,5%,1/10W,TP,1608	
RR26	2007-000087	R-CHIP;6.8Kohm,5%,1/10W,TP,1608	
RR27	2007-000113	R-CHIP;33ohm,5%,1/10W,TP,1608	
RR29	2007-000113	R-CHIP;33ohm,5%,1/10W,TP,1608	
RR29	2007-000113	R-CHIP;33ohm,5%,1/10W,TP,1608	
RR3	2007-000092	R-CHIP;3.3Kohm,5%,1/10W,TP,1608	
RR32	2007-000113	R-CHIP;33ohm,5%,1/10W,TP,1608	
RR36	2007-001894	R-CHIP;12Kohm,0.5%,1/10W,TP,1606	

RR37	2007-000113	R-CHIP;33ohm,5%,1/10W,TP,1608	
RR39	2007-000070	R-CHIP;0ohm,5%,1/10W,TP,1608	
RR4	2007-000082	R-CHIP;3.3Kohm,5%,1/10W,TP,1608	
RR44	2007-000113	R-CHIP;33ohm,5%,1/10W,TP,1608	
RR5	2007-000082	R-CHIP;3.3Kohm,5%,1/10W,TP,1608	
RR50	2007-000078	R-CHIP;1Kohm,5%,1/10W,TP,1608	
RR51	2007-000078	R-CHIP;1Kohm,5%,1/10W,TP,1608	
RR6	2007-000082	R-CHIP;3.3Kohm,5%,1/10W,TP,1608	
RR7	2007-000090	R-CHIP;10Kohm,5%,1/10W,TP,1608	
RR8	2007-000100	R-CHIP;68Kohm,5%,1/10W,TP,1608	
RR87	2007-000093	R-CHIP;0ohm,5%,1/4W,TP,3216	
RR9	2007-000093	R-CHIP;20Kohm,5%,1/10W,TP,1608	
SDC3	2203-005148	C-CER,CHIP;100nF;10%,16V,X7R,TP,1608	
SDC4	2203-005148	C-CER,CHIP;100nF;10%,16V,X7R,TP,1608	
SDC43	2203-005148	C-CER,CHIP;100nF;10%,16V,X7R,TP,1608	
SDC49	2203-005148	C-CER,CHIP;100nF;10%,16V,X7R,TP,1608	
SDC5	2203-005148	C-CER,CHIP;100nF;10%,16V,X7R,TP,1608	
SDC6	2203-005148	C-CER,CHIP;100nF;10%,16V,X7R,TP,1608	
SDC7	2203-005148	C-CER,CHIP;100nF;10%,16V,X7R,TP,1608	
SDC8	2203-005148	C-CER,CHIP;100nF;10%,16V,X7R,TP,1608	
SJACK	3722-001375	JACK-DIN;4P;-,NI,BLK,-	
U1	1204-002260	IC-PAL/NTSC DECODER,ES6629FD,PQFP,208P,2	
	1204-002224	IC-PAL/NTSC DECODER,ES6698FD,P	SV-DVD640 Only
VAR32	2007-000070	R-CHIP;0ohm,5%,1/10W,TP,1608	
VAR33	2007-000070	R-CHIP;0ohm,5%,1/10W,TP,1608	
VAR34	2007-000070	R-CHIP;0ohm,5%,1/10W,TP,1608	
VBD1	3301-001419	BEAD-SMD;-,220,-,500,TP,-,0.3	
VBD2	3301-001419	BEAD-SMD;-,220,-,500,TP,-,0.3	
VC10	2203-005148	C-CER,CHIP;100nF;10%,16V,X7R,TP,1608	
VC11	2203-005148	C-CER,CHIP;100nF;10%,16V,X7R,TP,1608	
VC17	2203-005148	C-CER,CHIP;100nF;10%,16V,X7R,TP,1608	
VC30	2203-001607	C-CER,CHIP;0.22nF;5%,50V,NP0,-,1608	
VC44	2203-001607	C-CER,CHIP;0.22nF;5%,50V,NP0,-,1608	
VC50	2203-005148	C-CER,CHIP;100nF;10%,16V,X7R,TP,1608	
VC6	2203-005148	C-CER,CHIP;100nF;10%,16V,X7R,TP,1608	
VC7	2203-005148	C-CER,CHIP;100nF;10%,16V,X7R,TP,1608	
VC8	2203-005148	C-CER,CHIP;100nF;10%,16V,X7R,TP,1608	
VC9	2203-005148	C-CER,CHIP;100nF;10%,16V,X7R,TP,1608	
VE1	2401-002165	C-AL;100uF;20%,16V,GP,TP,6.3x7.5	
VE2	2401-000922	C-AL;22uF;20%,16V,GP,TP,5x5.5	
VE4	2401-001479	C-AL;470UF;20%,10V,GP,TP,6.3*11MM,-	
VE5	2401-001479	C-AL;470UF;20%,10V,GP,TP,6.3*11MM,-	
VE6	2401-001479	C-AL;470UF;20%,10V,GP,TP,6.3*11MM,-	
VE7	2401-001479	C-AL;470UF;20%,10V,GP,TP,6.3*11MM,-	
VIC1	1204-001976	IC-VIDEO PROCESS;LA73054,-,36P,-,SSOP,7V	
VL1	3301-001419	BEAD-SMD;-,220,-,500,TP,-,0.3	
VL2	3301-001419	BEAD-SMD;-,220,-,500,TP,-,0.3	
VL3	3301-001419	BEAD-SMD;-,220,-,500,TP,-,0.3	
VL4	3301-001419	BEAD-SMD;-,220,-,500,TP,-,0.3	
VL5	3301-001419	BEAD-SMD;-,220,-,500,TP,-,0.3	
VL6	2703-000396	INDUCTOR-SMD;10uH,10%,3225	
VR10	2007-001164	R-CHIP;75ohm,1%,1/10W,TP,1608	
VR11	2007-001164	R-CHIP;75ohm,1%,1/10W,TP,1608	
VR17	2007-000084	R-CHIP;4.7Kohm,5%,1/10W,TP,1608	
VR18	2007-000084	R-CHIP;4.7Kohm,5%,1/10W,TP,1608	
VR2	2007-001164	R-CHIP;75ohm,1%,1/10W,TP,1608	
VR20	2007-001167	R-CHIP;75ohm,5%,1/10W,TP,1608	
VR21	2007-001167	R-CHIP;75ohm,5%,1/10W,TP,1608	
VR3	2007-001164	R-CHIP;75ohm,1%,1/10W,TP,1608	
VR32	2007-001167	R-CHIP;75ohm,5%,1/10W,TP,1608	
VR33	2007-001167	R-CHIP;75ohm,5%,1/10W,TP,1608	
VR34	2007-001167	R-CHIP;75ohm,5%,1/10W,TP,1608	
VR4	2007-001164	R-CHIP;75ohm,1%,1/10W,TP,1608	
VR5	2007-001164	R-CHIP;75ohm,1%,1/10W,TP,1608	
VR6	2007-001164	R-CHIP;75ohm,1%,1/10W,TP,1608	
VR7	2007-001164	R-CHIP;75ohm,1%,1/10W,TP,1608	
VR8	2007-001164	R-CHIP;75ohm,1%,1/10W,TP,1608	
VR9	2007-001164	R-CHIP;75ohm,1%,1/10W,TP,1608	
VRC16	2007-000070	R-CHIP;0ohm,5%,1/10W,TP,1608	
VRC31	2007-000070	R-CHIP;0ohm,5%,1/10W,TP,1608	
VSC1	2203-000257	C-CER,CHIP;10nF;10%,50V,X7R,TP,1608	
VZ20	0403-001083	DIODE-ZENER;UDZ9.1B,8.85-9.23V,200MW,UMD	
VZ21	0403-001083	DIODE-ZENER;UDZ9.1B,8.85-9.23V,200MW,UMD	
VZ22	0403-001083	DIODE-ZENER;UDZ9.1B,8.85-9.23V,200MW,UMD	
VZ23	0403-001083	DIODE-ZENER;UDZ9.1B,8.85-9.23V,200MW,UMD	
ZC47	2203-005148	C-CER,CHIP;100nF;10%,16V,X7R,TP,1608	
ZC49	2203-005148	C-CER,CHIP;100nF;10%,16V,X7R,TP,1608	
ZR49	2007-000078	R-CHIP;1Kohm,5%,1/10W,TP,1608	
ZR50	2007-000078	R-CHIP;1Kohm,5%,1/10W,TP,1608	

602	**AH32-00413A**	**ASSY PCB-DVD;SV-DVD640,DVD**	**DVD-V540 Only**
	AH32-00416A	**ASSY PCB-DVD;DVD-V640,DVD KAISER**	**DVD-V340 Only**
AC14	2203-001607	C-CER,CHIP;0.22nF;5%,50V,NP0,-,1608	
AC15	2203-005148	C-CER,CHIP;100nF;10%,16V,X7R,TP,1608	
AC18	2203-005148	C-CER,CHIP;100nF;10%,16V,X7R,TP,1608	
AC19	2203-005148	C-CER,CHIP;100nF;10%,16V,X7R,TP,1608	
AC20	2203-005148	C-CER,CHIP;100nF;10%,16V,X7R,TP,1608	
AC21	2203-000315	C-CER,CHIP;0.12NF;5%,50V,C0G,TP,1608	
AC22	2203-005148	C-CER,CHIP;100nF;10%,16V,X7R,TP,1608	
AC25	2203-000315	C-CER,CHIP;0.12NF;5%,50V,C0G,TP,1608	
AC26	2203-000125	C-CER,CHIP;1.2nF;10%,50V,X7R,TP,1608,-	
AC27	2203-005148	C-CER,CHIP;100nF;10%,16V,X7R,TP,1608	
AC4	2203-005148	C-CER,CHIP;100nF;10%,16V,X7R,TP,1608	
AC5	2203-000125	C-CER,CHIP;1.2nF;10%,50V,X7R,TP,1608,-	
AC9	2203-001607	C-CER,CHIP;0.22nF;5%,50V,NP0,-,1608	
ACC1	2203-005148	C-CER,CHIP;100nF;10%,16V,X7R,TP,1608	
ACC2	2203-005148	C-CER,CHIP;100nF;10%,16V,X7R,TP,1608	
AD1	0407-000114	DIODE-ARRAY;DAN202K,80V,100mA,CA2-3,SOT-	
AD2	0407-000114	DIODE-ARRAY;DAN202K,80V,100mA,CA2-3,SOT-	
AD40	0407-000116	DIODE-ARRAY;DAP202K,80V,100mA,CK2-3,SOT-	
AE10	2401-002165	C-AL;100uF;20%,16V,GP,TP,6.3x7.5	
AE11	2401-000922	C-AL;22uF;20%,16V,GP,TP,5x5.5	
AE13	2401-000922	C-AL;22uF;20%,16V,GP,TP,5x5.5	
AE14	2401-003107	C-AL;47uF;20%,16V,GP,TP,5x7.5	
AE3	2401-000909	C-AL;22uF;20%,16V,GP,TP,5x5.2.5	
AE4	2401-003107	C-AL;47uF;20%,16V,GP,TP,5x7.5	
AE5	2401-000922	C-AL;22uF;20%,16V,GP,TP,5x5.5	
AE9	2401-002165	C-AL;100uF;20%,16V,GP,TP,6.3x7.5	
AE5	2401-002165	C-AL;100uF;20%,16V,GP,TP,6.3x7.5	
AEE1	2401-000922	C-AL;22uF;20%,16V,GP,TP,5x5.5	
AEE2	2401-000922	C-AL;22uF;20%,16V,GP,TP,5x5.5	
AEE50	2401-000922	C-AL;22uF;20%,16V,GP,TP,5x5.5	
AEE51	2401-000922	C-AL;22uF;20%,16V,GP,TP,5x5.5	
AIC2	1002-001294	IC-D/A CONVERTER,PCM1742KE,24BIT,TSSOP,1	
AIC4	1201-000163	IC-OP AMP;4560,SOP,8P,173MIL,DUAL,100V/m	
AIC5	1201-000163	IC-OP AMP;4560,SOP,8P,173MIL,DUAL,100V/m	
AL1	3301-001419	BEAD-SMD;-,220,-,500,TP,-,0.3	
AL2	3301-001419	BEAD-SMD;-,220,-,500,TP,-,0.3	
AL3	3301-001419	BEAD-SMD;-,220,-,500,TP,-,0.3	
AL4	3301-001419	BEAD-SMD;-,220,-,500,TP,-,0.3	
AQ1	0504-000128	TR-DIGITAL;-,NPN,200MW,22K/22K,SOT-23,TP	
AQ2	0504-000156	TR-DIGITAL;KSR2103,PNP,200MW,22K/22K,SOT	
AQ20	0504-000128	TR-DIGITAL;-,NPN,200MW,22K/22K,SOT-23,TP	
AQ21	0504-000156	TR-DIGITAL;KSR2103,PNP,200MW,22K/22K,SOT	
AQ3	0501-000341	TR-SMALL SIGNAL;KSC1623-L,NPN,200mW,SOT-	
AQ4	0504-000128	TR-DIGITAL;-,NPN,200MW,22K/22K,SOT-23,TP	
AQ40	0501-000341	TR-SMALL SIGNAL;KSC1623-L,NPN,200mW,SOT-	
AQ41	0501-000341	TR-SMALL SIGNAL;KSC1623-L,NPN,200mW,SOT-	
AQ5	0504-000156	TR-DIGITAL;KSR2103,PNP,200MW,22K/22K,SOT	
AQ6	0501-000341	TR-SMALL SIGNAL;KSC1623-L,NPN,200mW,SOT-	
AR1	2007-000102	R-CHIP;100Kohm,5%,1/10W,TP,1608	
AR14	2007-000090	R-CHIP;10Kohm,5%,1/10W,TP,1608	
AR15	2007-000075	R-CHIP;220ohm,5%,1/10W,TP,1608	
AR16	2007-000075	R-CHIP;220ohm,5%,1/10W,TP,1608	
AR17	2007-000078	R-CHIP;1Kohm,5%,1/10W,TP,1608	
AR18	2007-000075	R-CHIP;220ohm,5%,1/10W,TP,1608	
AR28	2007-00009C	R-CHIP;10Kohm,5%,1/10W,TP,1608	
AR29	2007-000075	R-CHIP;220ohm,5%,1/10W,TP,1608	
AR3	2007-000102	R-CHIP;100Kohm,5%,1/10W,TP,1608	
AR30	2007-000075	R-CHIP;220ohm,5%,1/10W,TP,1608	
AR31	2007-000078	R-CHIP;1Kohm,5%,1/10W,TP,1608	
AR32	2007-000075	R-CHIP;220ohm,5%,1/10W,TP,1608	
AR35	2007-000074	R-CHIP;100ohm,5%,1/10W,TP,1608	
AR40	2007-000074	R-CHIP;100ohm,5%,1/10W,TP,1608	
AR41	2007-001179	R-CHIP;8.2Kohm,5%,1/10W,TP,1608	
AR42	2007-000092	R-CHIP;3.3Kohm,5%,1/10W,TP,1608	

AR43	2007-000092	R-CHIP;15Kohm,5%,1/10W,TP,1608	
AR46	2007-001179	R-CHIP;8.2Kohm,5%,1/10W,TP,1608	
AR47	2007-000092	R-CHIP;3.3Kohm,5%,1/10W,TP,1608	
AR48	2007-000092	R-CHIP;15Kohm,5%,1/10W,TP,1608	
AR49	2007-000102	R-CHIP;100Kohm,5%,1/10W,TP,1608	
AR50	2007-000102	R-CHIP;100Kohm,5%,1/10W,TP,1608	
ARR1	2007-000939	R-CHIP;47Kohm,1%,1/10W,TP,1608	
ARR2	2007-000939	R-CHIP;47Kohm,1%,1/10W,TP,1608	
ARR3	2007-000939	R-CHIP;47Kohm,1%,1/10W,TP,1608	
ARR4	2007-000939	R-CHIP;47Kohm,1%,1/10W,TP,1608	
ARR40	2007-000078	R-CHIP;1Kohm,5%,1/10W,TP,1608	
ARR41	2007-000078	R-CHIP;1Kohm,5%,1/10W,TP,1608	
ARR5	2007-000102	R-CHIP;100Kohm,5%,1/10W,TP,1608	
ARR50	2007-000090	R-CHIP;10Kohm,5%,1/10W,TP,1608	
ARR51	2007-000090	R-CHIP;10Kohm,5%,1/10W,TP,1608	
ARR6	2007-000102	R-CHIP;100Kohm,5%,1/10W,TP,1608	
AZ1	0403-001083	DIODE-ZENER;UDZ9.1B,8.85-9.23V,200MW,UMD	
AZ2	0403-001083	DIODE-ZENER;UDZ9.1B,8.85-9.23V,200MW,UMD	
AZ3	0403-001083	DIODE-ZENER;UDZ9.1B,8.85-9.23V,200MW,UMD	
AZ4	0403-001083	DIODE-ZENER;UDZ9.1B,8.85-9.23V,200MW,UMD	
BD01	3301-001419	BEAD-SMD;-,220,-,500,TP,-,0.3	
BD02	3301-001419	BEAD-SMD;-,220,-,500,TP,-,0.3	
C10	2203-000681	C-CER,CHIP;0.027NF;5%,50V,C0G,TP,1608	
C7	2203-005148	C-CER,CHIP;100nF;10%,16V,X7R,TP,1608	
C8	2203-005148	C-CER,CHIP;100nF;10%,16V,X7R,TP,1608	
C9	2203-000681	C-CER,CHIP;0.027NF;5%,50V,C0G,TP,1608	
CC1	2203-000440	C-CER,CHIP;1nF;10%,50V,X7R,TP,1608,-	
CC10	2203-005065	C-CER,CHIP;1000nF;+80-20%,10V,Y5V,-,1608	
CC12	2203-005065	C-CER,CHIP;1000nF;+80-20%,10V,Y5V,-,1608	
CC13	2203-005148	C-CER,CHIP;100nF;10%,16V,X7R,TP,1608	
CC14	2203-005148	C-CER,CHIP;100nF;10%,16V,X7R,TP,1608	
CC15	2203-005148	C-CER,CHIP;100nF;10%,16V,X7R,TP,1608	
CC17	2203-001103	C-CER,CHIP;6.8nF;10%,50V,X7R,TP,1608,-	
CC2	2203-000440	C-CER,CHIP;1nF;10%,50V,X7R,TP,1608,-	
CC20	2203-005065	C-CER,CHIP;1000nF;+80-20%,10V,Y5V,-,1608	
CC21	2203-000575	C-CER,CHIP;47nF;10%,25V,X7R,TP,1608,-	
CC22	2203-005148	C-CER,CHIP;100nF;10%,16V,X7R,TP,1608	
CC23	2203-001052	C-CER,CHIP;0.56nF;10%,50V,X7R,TP,1608	
CC24	2203-005148	C-CER,CHIP;100nF;10%,16V,X7R,TP,1608	
CC25	2203-000998	C-CER,CHIP;0.047NF;5%,50V,C0G,TP,1608	
CC26	2203-005148	C-CER,CHIP;100nF;10%,16V,X7R,TP,1608	
CC27	2203-005148	C-CER,CHIP;100nF;10%,16V,X7R,TP,1608	
CC28	2203-005221	C-CER,CHIP;15nF;10%,50V,X7R,TP,1608,-	
CC3	2203-000440	C-CER,CHIP;1nF;10%,50V,X7R,TP,1608,-	
CC30	2203-001052	C-CER,CHIP;0.56nF;10%,50V,X7R,TP,1608	
CC31	2203-005221	C-CER,CHIP;15nF;10%,50V,X7R,TP,1608,-	
CC32	2203-005221	C-CER,CHIP;15nF;10%,50V,X7R,TP,1608,-	
CC33	2203-001052	C-CER,CHIP;0.56nF;10%,50V,X7R,TP,1608	
CC34	2203-005148	C-CER,CHIP;100nF;10%,16V,X7R,TP,1608	
CC35	2203-000815	C-CER,CHIP;0.033NF;5%,50V,C0G,TP,1608	
CC36	2203-000815	C-CER,CHIP;0.033NF;5%,50V,C0G,TP,1608	
CC37	2203-000815	C-CER,CHIP;0.033NF;5%,50V,C0G,TP,1608	
CC4	2203-000440	C-CER,CHIP;1nF;10%,50V,X7R,TP,1608,-	
CC5	2203-000189	C-CER,CHIP;100nF;+80-20%,25V,Y5V,TP,1608	
CCE	2401-001250	C-AL;4.7uF;20%,35V,GP,TP,4x5.5	
CCC01	2203-005148	C-CER,CHIP;100nF;10%,16V,X7R,TP,1608	
CCC02	2203-005148	C-CER,CHIP;100nF;10%,16V,X7R,TP,1608	
CCC03	2203-005148	C-CER,CHIP;100nF;10%,16V,X7R,TP,1608	
CCC04	2203-005148	C-CER,CHIP;100nF;10%,16V,X7R,TP,1608	
CCC05	2203-005148	C-CER,CHIP;100nF;10%,16V,X7R,TP,1608	
CCC06	2203-005148	C-CER,CHIP;100nF;10%,16V,X7R,TP,1608	
CCC07	2203-005148	C-CER,CHIP;100nF;10%,16V,X7R,TP,1608	
CCC08	2401-001479	C-AL;470UF;20%,10V,GP,TP,6.3*11MM,-	
CCC09	2203-005148	C-CER,CHIP;100nF;10%,16V,X7R,TP,1608	
CCC10	2401-001479	C-AL;470UF;20%,10V,GP,TP,6.3*11MM,-	
CCC13	2401-002144	C-AL;47uF;20%,16V,GP,TP,5x11.5	

CCC15	2203-005148	C-CER,CHIP;100nF;10%,16V,X7R,TP,1608	
CCC16	2203-005148	C-CER,CHIP;100nF;10%,16V,X7R,TP,1608	
CCC17	2203-005148	C-CER,CHIP;100nF;10%,16V,X7R,TP,1608	
CCC18	2203-005148	C-CER,CHIP;100nF;10%,16V,X7R,TP,1608	
CCC19	2203-005148	C-CER,CHIP;100nF;10%,16V,X7R,TP,1608	
CCC20	2203-005148	C-CER,CHIP;100nF;10%,16V,X7R,TP,1608	
CCC21	2203-005148	C-CER,CHIP;100nF;10%,16V,X7R,TP,1608	
CCC22	2203-005148	C-CER,CHIP;100nF;10%,16V,X7R,TP,1608	
CCC23	2203-005148	C-CER,CHIP;100nF;10%,16V,X7R,TP,1608	
CL300	2007-000033	R-CHIP;0ohm,5%,1/4W,TP,3216	
CN41	3710-002050	CONNECTOR-SOCKET;12P,1R,2mm,STRAIGHT,SN,	
CN42	3710-002050	CONNECTOR-SOCKET;12P,1R,2mm,STRAIGHT,SN,	
CNL1	3301-001419	BEAD-SMD;-,220,-,500,TP,-,0.3	
CNL2	3301-001419	BEAD-SMD;-,220,-,500,TP,-,0.3	
CVL0	3301-001419	BEAD-SMD;-,220,-,500,TP,-,0.3	
CVL1	3301-001419	BEAD-SMD;-,220,-,500,TP,-,0.3	
CVL2	3301-001419	BEAD-SMD;-,220,-,500,TP,-,0.3	
DABD1	3301-001419	BEAD-SMD;-,220,-,500,TP,-,0.3	
DAC2	2203-005148	C-CER,CHIP;100nF;10%,16V,X7R,TP,1608	DVD-V540 Only
DAC4	2203-005148	C-CER,CHIP;100nF;10%,16V,X7R,TP,1608	
DAE2	2401-000598	C-AL;1uF,20%,50V,GP,TP,4x7,5	DVD-V540 Only
DAL1	2703-000398	INDUCTOR-SMD;10uH,10%,3225	DVD-V540 Only
DAL3	2901-001273	FILTER-EMI SMD;50V,2A,-,220pF,3.2x1.6x0.	
DAR1	2007-000402	R-CHIP;150ohm,5%,1/10W,TP,1608	
DAR2	2007-000402	R-CHIP;150ohm,5%,1/10W,TP,1608	
DAR24	2007-000070	R-CHIP;0ohm,5%,1/10W,TP,1608	
DAR3	2007-000075	R-CHIP;220ohm,5%,1/10W,TP,1608	DVD-V540 Only
DAZ1	0403-001083	DIODE-ZENER;UDZ9.1B,8.85-9.23V,200MW,UMD	
DAZ2	0403-001083	DIODE-ZENER;UDZ9.1B,8.85-9.23V,200MW,UMD	
DCON1	3708-001266	CONNECTOR-FPC/FFC/PIC;11P,1MM,STRAIGHT,S	
DCON3	3708-001696	CONNECTOR-FPC/FFC/PIC;24P,1MM,STRAIGHT,S	
DIC2	1107-001369	IC-FLASH MEMORY;29LV800,1Mx8/512Kx16,TSO	
DIC3	1103-001134	IC-EEPROM;24C040,512x8,SOP;8P,5.13x3.95m	DVD-V540 Only
	1103-001204	IC-EEPROM;24C021,256x8,SOP;8P,5	DVD-V340 Only
DIC4	0801-002701	IC-CMOS LOGIC;74VHCT125A,BUFFER,TSSOP,14	
DIC5	1105-001513	IC-DRAM;IS42S16400A-7T,1Mx16Bitx4Bit,T	
DJP10	2007-000078	R-CHIP;1Kohm,5%,1/10W,TP,1608	
DJP11	2007-000078	R-CHIP;1Kohm,5%,1/10W,TP,1608	
DJP2	2007-000078	R-CHIP;1Kohm,5%,1/10W,TP,1608	
DOIC2	3707-001065	CONNECTOR-OPTICAL;PLUG,GP1FA550TZ,6dB,2.	DVD-V540 Only
DY1	2801-004279	CRYSTAL-UNIT;27.00MHz,10ppm,28-AAA,20pF,	
ECC1	2203-005148	C-CER,CHIP;100nF;10%,16V,X7R,TP,1608	
ECC2	2203-005148	C-CER,CHIP;100nF;10%,16V,X7R,TP,1608	
FB2	3301-001419	BEAD-SMD;-,220,-,500,TP,-,0.3	
JACK1	3722-002059	JACK-PIN;6P6P,-,RED,WHT/BLU,BLK/GRY,A	
JL1	3301-001419	BEAD-SMD;-,220,-,500,TP,-,0.3	
JL2	3301-001419	BEAD-SMD;-,220,-,500,TP,-,0.3	
LDD1	0407-000116	DIODE-ARRAY;DAP202K,80V,100mA,CK2-3,SOT-	
LDD2	0407-000116	DIODE-ARRAY;DAP202K,80V,100mA,CK2-3,SOT-	
LDQ1	0501-000341	TR-SMALL SIGNAL;KSC1623-L,NPN,200mW,SOT-	
LDQ2	0501-000341	TR-SMALL SIGNAL;KSC1623-L,NPN,200mW,SOT-	
LDQ3	0501-000341	TR-SMALL SIGNAL;KSC1623-L,NPN,200mW,SOT-	
LDR1	2007-000090	R-CHIP;10Kohm,5%,1/10W,TP,1608	
LDR2	2007-000090	R-CHIP;10Kohm,5%,1/10W,TP,1608	
LDR3	2007-000539	R-CHIP;200ohm,5%,1/10W,TP,1608	
LDR4	2007-000090	R-CHIP;10Kohm,5%,1/10W,TP,1608	
LDR5	2007-000090	R-CHIP;10Kohm,5%,1/10W,TP,1608	
LDR6	2007-000070	R-CHIP;0ohm,5%,1/10W,TP,1608	
LPC2	2203-000440	C-CER,CHIP;1nF;10%,50V,X7R,TP,1608,-	
LPC3	2203-000440	C-CER,CHIP;1nF;10%,50V,X7R,TP,1608,-	
LPC4	2203-005148	C-CER,CHIP;100nF;10%,16V,X7R,TP,1608	
LPE1	2401-002165	C-AL;100uF,20%,16V,GP,TP,6.3x7,5	
LPE2	2401-002165	C-AL;100uF,20%,16V,GP,TP,6.3x7,5	
LPR1	2007-000312	R-CHIP;10ohm,5%,1/4W,TP,3216	
LPR2	2007-000365	R-CHIP;5.1Kohm,5%,1/10W,TP,1608	
LPR3	2007-000078	R-CHIP;1Kohm,5%,1/10W,TP,1608	

LPR4	2007-000312	R-CHIP;10ohm,5%,1/4W,TP,3216	
MIC1	2203-005148	C-CER,CHIP;100nF;10%,16V,X7R,TP,1608	
MIC3	2203-005148	C-CER,CHIP;100nF;10%,16V,X7R,TP,1608	
MIC4	2203-005148	C-CER,CHIP;100nF;10%,16V,X7R,TP,1608	
MIC5	2203-005148	C-CER,CHIP;100nF;10%,16V,X7R,TP,1608	
MICE1	2401-003107	C-AL;47uF,20%,16V,GP,TP,5x7,5	
MICE2	2401-003107	C-AL;47uF,20%,16V,GP,TP,5x7,5	
MICE3	2401-003107	C-AL;47uF,20%,16V,GP,TP,5x7,5	
MID1	0407-000114	DIODE-ARRAY;DAN202K,80V,100mA,CA2-3,SOT-	
MIC1	1003-001661	IC-MOTOR DRIVER;FAN8004,HOP;48P,*3.2x13	
MIC2	1201-001842	IC-OP AMP;TL3472CD,SO,TP;8P,-,DUAL,-,PAL	
MPE1	2401-002165	C-AL;100uF,20%,16V,GP,TP,6.3x7,5	
MR1	2007-000090	R-CHIP;10Kohm,5%,1/10W,TP,1608	
MR10	2007-000084	R-CHIP;4.7Kohm,5%,1/10W,TP,1608	
MR11	2007-000090	R-CHIP;10Kohm,5%,1/10W,TP,1608	
MR12	2007-000109	R-CHIP;1Mohm,5%,1/10W,TP,1608	
MR13	2007-000094	R-CHIP;22Kohm,5%,1/10W,TP,1608	
MR14	2007-000094	R-CHIP;22Kohm,5%,1/10W,TP,1608	
MR15	2007-000090	R-CHIP;10Kohm,5%,1/10W,TP,1608	
MR16	2007-000123	R-CHIP;1.5Kohm,5%,1/10W,TP,1608	
MR17	2007-000090	R-CHIP;10Kohm,5%,1/10W,TP,1608	
MR18	2007-000123	R-CHIP;1.5Kohm,5%,1/10W,TP,1608	
MR2	2007-000090	R-CHIP;10Kohm,5%,1/10W,TP,1608	
MR25	2007-000094	R-CHIP;22Kohm,5%,1/10W,TP,1608	
MR26	2007-000090	R-CHIP;10Kohm,5%,1/10W,TP,1608	
MR3	2007-000081	R-CHIP;2.7Kohm,5%,1/10W,TP,1608	
MR4	2007-000092	R-CHIP;15Kohm,5%,1/10W,TP,1608	
MR5	2007-000092	R-CHIP;15Kohm,5%,1/10W,TP,1608	
MR6	2007-000093	R-CHIP;20Kohm,5%,1/10W,TP,1608	
MR7	2007-000092	R-CHIP;15Kohm,5%,1/10W,TP,1608	
MR8	2007-000090	R-CHIP;10Kohm,5%,1/10W,TP,1608	
MR9	2007-000127	R-CHIP;9.1Kohm,5%,1/10W,TP,1608	
MTR4	2007-000070	R-CHIP;0ohm,5%,1/10W,TP,1608	
MTR5	2007-000070	R-CHIP;0ohm,5%,1/10W,TP,1608	
MTR6	2007-000070	R-CHIP;0ohm,5%,1/10W,TP,1608	
opc10	2007-000123	R-CHIP,1.5Kohm,5%,1/10W,TP,1608	
OPR11	2007-000083	R-CHIP;3Kohm,5%,1/10W,TP,1608	
OPR13	2007-000070	R-CHIP;0ohm,5%,1/10W,TP,1608	
PAC10	2203-005148	C-CER,CHIP;100nF;10%,16V,X7R,TP,1608	
PAE11	2401-002165	C-AL;100uF,20%,16V,GP,TP,6.3x7,5	
PL2	2703-000398	INDUCTOR-SMD;10uH,10%,3225	
PPBD1	3301-001419	BEAD-SMD;-,220,-,500,TP,-,0.3	
PPC1	2203-000257	C-CER,CHIP;10nF,10%,50V,X7R,TP,1608	
PPC118	2203-005148	C-CER,CHIP;100nF;10%,16V,X7R,TP,1608	
PPC2	2203-000257	C-CER,CHIP;10nF;10%,50V,X7R,TP,1608	
PPC3	2203-000257	C-CER,CHIP;10nF;10%,50V,X7R,TP,1608	
PPC80	2203-005148	C-CER,CHIP;100nF;10%,16V,X7R,TP,1608	
PPC81	2203-005148	C-CER,CHIP;100nF;10%,16V,X7R,TP,1608	
PPC82	2203-005148	C-CER,CHIP;100nF;10%,16V,X7R,TP,1608	
PPE1	2401-002165	C-AL;100uF,20%,16V,GP,TP,6.3x7,5	
PPE110	2401-002144	C-AL;47uF,20%,16V,GP,TP,5x11,5	
PPE18	2401-001479	C-AL;470UF,20%,10V,GP,TP,6.3*11MM,-	
PPE2	2401-002165	C-AL;100uF,20%,16V,GP,TP,6.3x7,5	
PPE25	2401-002144	C-AL;47uF,20%,16V,GP,TP,5x11,5	
PPE3	2401-002165	C-AL;100uF,20%,16V,GP,TP,6.3x7,5	
PPE4	2401-003107	C-AL;47uF,20%,16V,GP,TP,5x7,5	
PPIC2	1203-003132	IC-POSI.ADJUST REG.;AMC1117,SOT-223,3P,5	
PPIC3	1203-003216	IC-POSI.FIXED REG.;G9133,TO-220F,4P,10.1	
PPIC5	1203-000293	IC-POSI.FIXED REG.;7808,TO-220,3P,-,PLAS	
PPL10	2703-000398	INDUCTOR-SMD;10uH,10%,3225	
PPL12	2007-000033	R-CHIP;0ohm,5%,1/4W,TP,3216	
PPL2	2007-000033	R-CHIP;0ohm,5%,1/4W,TP,3216	
PPL80	2007-000070	R-CHIP;0ohm,5%,1/10W,TP,1608	
PPR1	2007-000033	R-CHIP;0ohm,5%,1/4W,TP,3216	
PPR2	2007-000343	R-CHIP;120ohm,1%,1/10W,TP,1608	
PPR3	2007-000074	R-CHIP;100ohm,5%,1/10W,TP,1608	

QLP1	0501-000279	TR-SMALL SIGNAL;KSA1182-Y,PNP,150mW,SOT-	
QLP2	0501-000279	TR-SMALL SIGNAL;KSA1182-Y,PNP,150mW,SOT-	
R10	2007-000084	R-CHIP;4.7Kohm,5%,1/10W,TP,1608	
R13	2007-000118	R-CHIP;390ohm,5%,1/10W,TP,1608	
R36	2007-000113	R-CHIP;33ohm,5%,1/10W,TP,1608	
R38	2007-000113	R-CHIP;33ohm,5%,1/10W,TP,1608	
R39	2007-000113	R-CHIP;33ohm,5%,1/10W,TP,1608	
R46	2007-000113	R-CHIP;33ohm,5%,1/10W,TP,1608	
R41	2007-000113	R-CHIP;33ohm,5%,1/10W,TP,1608	
R42	2007-000102	R-CHIP;100Kohm,5%,1/10W,TP,1608	
R46	2007-00[illegible]3	R-CHIP;33ohm,5%,1/10W,TP,1608	
R47	2007-000113	R-CHIP;33ohm,5%,1/10W,TP,1608	
R7	2007-000084	R-CHIP;4.7Kohm,5%,1/10W,TP,1608	
R73	2007-000084	R-CHIP;4.7Kohm,5%,1/10W,TP,1608	
R8	2007-000084	R-CHIP;4.7Kohm,5%,1/10W,TP,1608	
R9	2007-000084	R-CHIP;4.7Kohm,5%,1/10W,TP,1608	
RAR11	2007-000070	R-CHIP;0ohm,5%,1/10W,TP,1608	
RC1	2203-005148	C-CER,CHIP;100nF;10%,16V,X7R,TP,1608	
RC12	2203-005148	C-CER,CHIP;100nF;10%,16V,X7R,TP,1608	
RC14	2203-005148	C-CER,CHIP;100nF;10%,16V,X7R,TP,1608	
RC19	2203-000315	C-CER,CHIP;3.3pF;5%,50V,C0G,TP,1608	
RC20	2203-000491	C-CER,CHIP;2.2nF;10%,50V,X7R,TP,1608,-	
RC21	2203-000491	C-CER,CHIP;2.2nF;10%,50V,X7R,TP,1608,-	
RC22	2203-000975	C-CER,CHIP;47nF;10%,25V,X7R,TP,1608,-	
RC23	2203-000491	C-CER,CHIP;2.2nF;10%,50V,X7R,TP,1608,-	
RC24	2203-005148	C-CER,CHIP;100nF;10%,16V,X7R,TP,1608	
RC25	2203-000491	C-CER,CHIP;2.2nF;10%,50V,X7R,TP,1608,-	
RC28	2203-001222	C-CER,CHIP;22pF;[illegible]%,50V,X7R,TP,1608	
RC29	2203-000257	C-CER,CHIP;10nF;10%,50V,X7R,TP,1608	
RC30	2203-000257	C-CER,CHIP;10nF;10%,50V,X7R,TP,1608	
RC31	2203-005148	C-CER,CHIP;100nF;10%,16V,X7R,TP,1608	
RC32	2203-001656	C-CER,CHIP;0.47nF;5%,50V,NP0,TP,1608	
RC33	2203-001656	C-CER,CHIP;0.47nF;5%,50V,NP0,TP,1608	
RC34	2203-000440	C-CER,CHIP;1nF;10%,50V,X7R,TP,1608,-	
RC35	2203-005148	C-CER,CHIP;100nF;10%,16V,X7R,TP,1608	
RC36	2203-000888	C-CER,CHIP;4.7nF;10%,50V,X7R,TP,1608	
RC37	2203-000866	C-CER,CHIP;4.7nF;10%,50V,X7R,TP,1608	
RC6	2203-000257	C-CER,CHIP;10nF;10%,50V,X7R,TP,1608	
RC7	2203-001634	C-CER,CHIP;33nF;10%,50V,X7R,TP,1608,1.6m	
RC8	2203-000405	C-CER,CHIP;3.3pF;5%,50V,C0G,TP,1608	
RC9	2203-000560	C-CER,CHIP;220nF;+80-20%,25V,Y5V,TP,1608	
RCL23	3301-000314	BEAD-SMD;-,120ohm,1.6x0.8x0.8mm,150mA,-,-	
RE10	2401-001479	C-AL;470UF,20%,10V,GP,TP,6.3*11MM,-	
RIC1	1204-002223	IC-RF CIRCUIT;TEA6663J,LQFP64P,10x10mm,P	
RL1	2703-000398	INDUCTOR-SMD;10uH,10%,3225	
RL2	2703-000398	INDUCTOR-SMD;10uH,10%,3225	
RN1	2011-000475	R-NET;330HM,5%,1/16W,L,CHIP;8P,TP,32	
RN2	2011-000475	R-NET;330HM,5%,1/16W,L,CHIP;8P,TP,32	
RN3	2011-000475	R-NET;330HM,5%,1/16W,L,CHIP;8P,TP,32	
ROC1	2203-005148	C-CER,CHIP;100nF;10%,16V,X7R,TP,1608	
ROR2	2007-000070	R-CHIP;0ohm,5%,1/10W,TP,1608	
RR11	2007-000070	R-CHIP;0ohm,5%,1/10W,TP,1608	
RR15	2007-000134	R-CHIP;33Kohm,5%,1/10W,TP,1608	
RR16	2007-000122	R-CHIP,1.2Kohm,5%,1/10W,TP,1608	
RR17	2007-000090	R-CHIP;10Kohm,5%,1/10W,TP,1608	
RR18	2007-000565	R-CHIP;5.1Kohm,5%,1/10W,TP,1608	
RR19	2007-000070	R-CHIP;0ohm,5%,1/10W,TP,1608	
RR20	2007-000070	R-CHIP;0ohm,5%,1/10W,TP,1608	
RR21	2007-000087	R-CHIP;5.6Kohm,5%,1/10W,TP,1608	
RR22	2007-000087	R-CHIP;5.6Kohm,5%,1/10W,TP,1608	
RR24	2007-000087	R-CHIP;5.6Kohm,5%,1/10W,TP,1608	
RR25	2007-000087	R-CHIP;5.6Kohm,5%,1/10W,TP,1608	
RR26	2007-000087	R-CHIP;5.6Kohm,5%,1/10W,TP,1608	
RR27	2007-000113	R-CHIP;33ohm,5%,1/10W,TP,1608	
RR28	2007-000113	R-CHIP;33ohm,5%,1/10W,TP,1608	
RR29	2007-000113	R-CHIP;33ohm,5%,1/10W,TP,1608	

RR3	2007-000082	R-CHIP;3.3Kohm,5%,1/10W,TP,1608	
RR32	2007-000113	R-CHIP;33ohm,5%,1/10W,TP,1608	
RR36	2007-001594	R-CHIP;12Kohm,0.5%,1/10W,TP,1608	
RR37	2007-000113	R-CHIP;33ohm,5%,1/10W,TP,1608	
RR39	2007-000070	R-CHIP;0ohm,5%,1/10W,TP,1608	
RR4	2007-000082	R-CHIP;3.3Kohm,5%,1/10W,TP,1608	
RR44	2007-000113	R-CHIP;33ohm,5%,1/10W,TP,1608	
RR5	2007-000082	R-CHIP;3.3Kohm,5%,1/10W,TP,1608	
RR50	2007-000078	R-CHIP;1Kohm,5%,1/10W,TP,1608	
RR51	2007-000078	R-CHIP;1Kohm,5%,1/10W,TP,1608	
RR6	2007-000082	R-CHIP;3.3Kohm,5%,1/10W,TP,1608	
RR7	2007-000090	R-CHIP;10Kohm,5%,1/10W,TP,1608	
RR8	2007-000100	R-CHIP;68Kohm,5%,1/10W,TP,1608	
RR87	2007-000033	R-CHIP;0ohm,5%,1/4W,TP,3216	
RR9	2007-000093	R-CHIP;20Kohm,5%,1/10W,TP,1608	
SDC3	2203-005148	C-CER,CHIP;100nF;10%,16V,X7R,TP,1608	
SDC4	2203-005148	C-CER,CHIP;100nF;10%,16V,X7R,TP,1608	
SDC43	2203-005148	C-CER,CHIP;100nF;10%,16V,X7R,TP,1608	
SDC49	2203-005148	C-CER,CHIP;100nF;10%,16V,X7R,TP,1608	
SDC5	2203-005148	C-CER,CHIP;100nF;10%,16V,X7R,TP,1608	
SDC6	2203-005148	C-CER,CHIP;100nF;10%,16V,X7R,TP,1608	
SDC7	2203-005148	C-CER,CHIP;100nF;10%,16V,X7R,TP,1608	
SDC8	2203-005148	C-CER,CHIP;100nF;10%,16V,X7R,TP,1608	
SJACK	3722-001375	JACK-DIN;4P,-,NI,BLK,-	
U1	1204-002224	IC-PAL/NTSC DECODER;ES6698FD,PQFP,208P,2	DVD-V540 Only
	1204-002260	IC-PAL/NTSC DECODER;ES6629FD,PQ	DVD-V340 Only
VBD1	3301-001419	BEAD-SMD;-,220,-,500,TP,-,0.3	
VBD2	3301-001419	BEAD-SMD;-,220,-,500,TP,-,0.3	
VC10	2203-005148	C-CER,CHIP;100nF;10%,16V,X7R,TP,1608	
VC11	2203-005148	C-CER,CHIP;100nF;10%,16V,X7R,TP,1608	
VC14	2203-001607	C-CER,CHIP;0.22nF;5%,50V,NP0,-,1608	
VC15	2203-001607	C-CER,CHIP;0.22nF;5%,50V,NP0,-,1608	
VC16	2203-001607	C-CER,CHIP;0.22nF;5%,50V,NP0,-,1608	
VC17	2203-005148	C-CER,CHIP;100nF;10%,16V,X7R,TP,1608	
VC30	2203-001607	C-CER,CHIP;0.22nF;5%,50V,NP0,-,1608	
VC44	2203-001607	C-CER,CHIP;0.22nF;5%,50V,NP0,-,1608	
VC50	2203-005148	C-CER,CHIP;100nF;10%,16V,X7R,TP,1608	
VC6	2203-005148	C-CER,CHIP;100nF;10%,16V,X7R,TP,1608	
VC7	2203-005148	C-CER,CHIP;100nF;10%,16V,X7R,TP,1608	
VC8	2203-005148	C-CER,CHIP;100nF;10%,16V,X7R,TP,1608	
VC9	2203-005148	C-CER,CHIP;100nF;10%,16V,X7R,TP,1608	
VE1	2401-002165	C-AL;100uF,20%,16V,GP,TP,6.3x7,5	
VE2	2401-000922	C-AL;22uF,20%,16V,GP,TP,5x5,5	
VE4	2401-001479	C-AL;470UF,20%,10V,GP,TP,6.3*11MM,-	
VE5	2401-001479	C-AL;470UF,20%,10V,GP,TP,6.3*11MM,-	
VE6	2401-001479	C-AL;470UF,20%,10V,GP,TP,6.3*11MM,-	
VE7	2401-001479	C-AL;470UF,20%,10V,GP,TP,6.3*11MM,-	
VIC1	1204-001978	IC-VIDEO PROCESS;LA7305A,-,36P,-,SSOP,7V	
VL1	3301-001419	BEAD-SMD;-,220,-,500,TP,-,0.3	
VL2	3301-001419	BEAD-SMD;-,220,-,500,TP,-,0.3	
VL3	3301-001419	BEAD-SMD;-,220,-,500,TP,-,0.3	
VL4	3301-001419	BEAD-SMD;-,220,-,500,TP,-,0.3	
VL5	3301-001419	BEAD-SMD;-,220,-,500,TP,-,0.3	
VL6	2703-000398	INDUCTOR-SMD;10uH,10%,3225	
VR10	2007-001164	R-CHIP;75ohm,1%,1/10W,TP,1608	
VR11	2007-001164	R-CHIP;75ohm,1%,1/10W,TP,1608	
VR18	2007-000070	R-CHIP;0ohm,5%,1/10W,TP,1608	
VR19	2007-000084	R-CHIP;4.7Kohm,5%,1/10W,TP,1608	
VR2	2007-001164	R-CHIP;75ohm,1%,1/10W,TP,1608	
VR20	2007-001167	R-CHIP;75ohm,5%,1/10W,TP,1608	
VR21	2007-001167	R-CHIP;75ohm,5%,1/10W,TP,1608	
VR3	2007-001164	R-CHIP;75ohm,1%,1/10W,TP,1608	
VR32	2007-001167	R-CHIP;75ohm,5%,1/10W,TP,1608	
VR33	2007-001167	R-CHIP;75ohm,5%,1/10W,TP,1608	
VR34	2007-001167	R-CHIP;75ohm,5%,1/10W,TP,1608	
VR4	2007-001164	R-CHIP;75ohm,1%,1/10W,TP,1608	

VR5	2007-001164	R-CHIP;75ohm,1%,1/10W,TP,1608
VR6	2007-001164	R-CHIP;75ohm,1%,1/10W,TP,1608
VR7	2007-001164	R-CHIP;75ohm,1%,1/10W,TP,1608
VR8	2007-001164	R-CHIP;75ohm,1%,1/10W,TP,1608
VR9	2007-001164	R-CHIP;75ohm,1%,1/10W,TP,1608
VRC17	2007-000070	R-CHIP;0ohm,5%,1/10W,TP,1608
VRC31	2007-000070	R-CHIP;0ohm,5%,1/10W,TP,1608
VSC1	2203-000257	C-CER,CHIP;10nF,10%,50V,X7R,TP,1608
VZ10	0403-001083	DIODE-ZENER;UDZ9.1B,8.85-9.23V,200MW,UMD
VZ20	0403-001083	DIODE-ZENER;UDZ9.1B,8.85-9.23V,200MW,UMD
VZ21	0403-001083	DIODE-ZENER;UDZ9.1B,8.85-9.23V,200MW,UMD
VZ22	0403-001083	DIODE-ZENER;UDZ9.1B,8.85-9.23V,200MW,UMD
VZ23	0403-001083	DIODE-ZENER;UDZ9.1B,8.85-9.23V,200MW,UMD
VZ5	0403-001083	DIODE-ZENER;UDZ9.1B,8.85-9.23V,200MW,UMD
VZ6	0403-001083	DIODE-ZENER;UDZ9.1B,8.85-9.23V,200MW,UMD
VZ7	0403-001083	DIODE-ZENER;UDZ9.1B,8.85-9.23V,200MW,UMD
VZ8	0403-001083	DIODE-ZENER;UDZ9.1B,8.85-9.23V,200MW,UMD
VZ9	0403-001083	DIODE-ZENER;UDZ9.1B,8.85-9.23V,200MW,UMD
ZC47	2203-005148	C-CER,CHIP;100nF,10%,16V,X7R,TP,1608
ZC49	2203-005148	C-CER,CHIP;100nF,10%,16V,X7R,TP,1608
ZR49	2007-000078	R-CHIP;1Kohm,5%,1/10W,TP,1608
ZR50	2007-000078	R-CHIP;1Kohm,5%,1/10W,TP,1608

5. Block Diagram

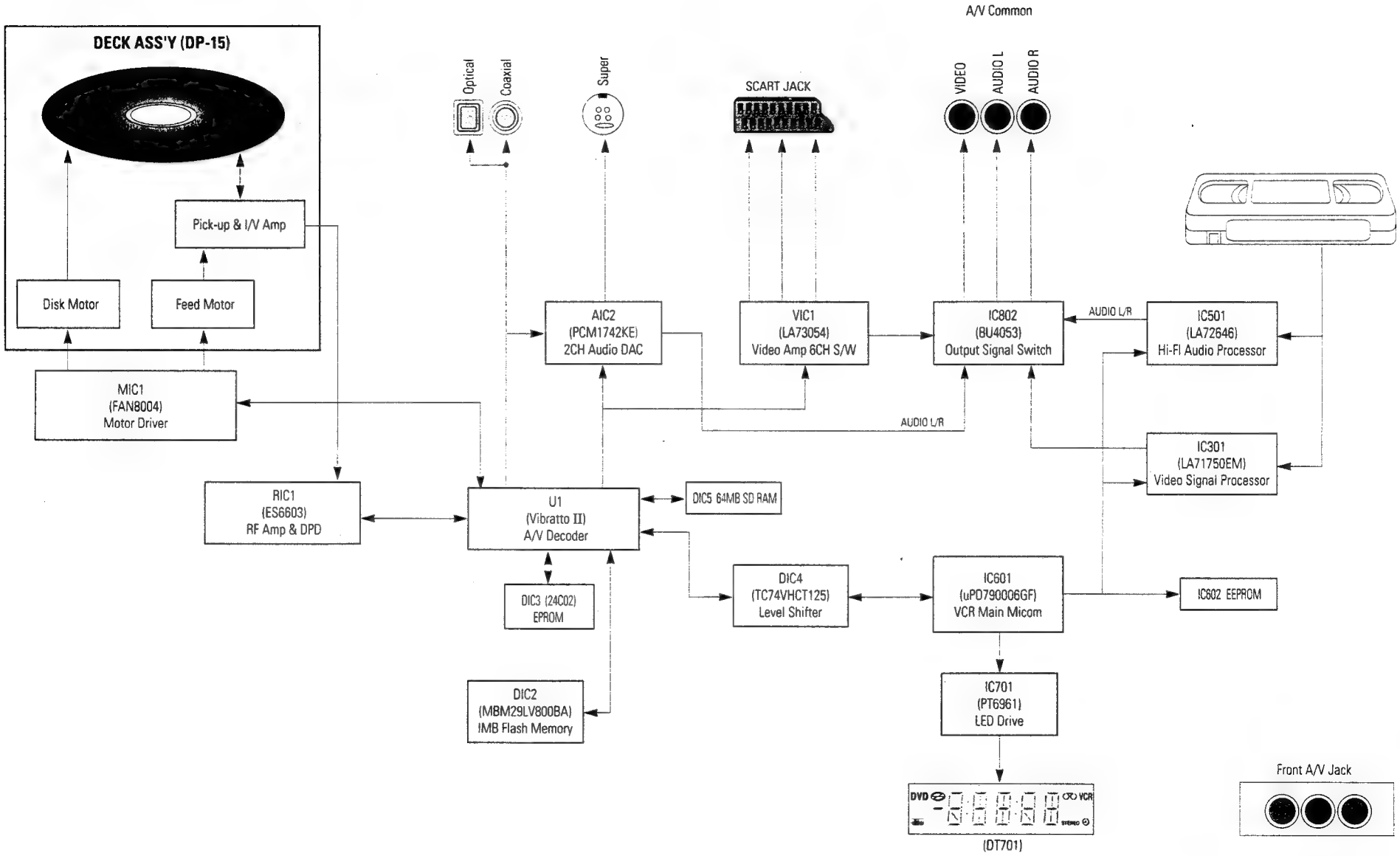

This Document can not be used without Samsung's authorization

6. Schematic Diagrams

6-1 S.M.P.S. ---------- 6-2

6-2 Power Drive ---------- 6-3

6-3 Display/Function ---------- 6-4

6-3 System Control/Servo ---------- 6-5

6-5 A/V ---------- 6-6

6-6 Hi-Fi ---------- 6-7

6-7 A2/NICAM ---------- 6-8

6-8 SECAM (Option) ---------- 6-9

6-9 OSD/VPS/PDC ---------- 6-10

6-10 TM ---------- 6-11

6-11 Input-Output ---------- 6-12

6-12 DVD AV DECORDER ---------- 6-13

6-13 DVD SERVO ---------- 6-14

6-14 DVD AUDIO/VIDEO ---------- 6-15

Note

For schematic Diagram
- Resistors are in ohms, 1/8W unless otherwise noted.

Special note :
Most semiconductor devices are electrostatically sensitive and therefore require the special handling techniques described under the "electrostatically sensitive (ES) devices" section of this service manual.

Note :
Do not use the part number shown on this drawing for ordering. The correct part number is shown in the parts list (may be slightly different or amended since this drawing was prepared).

Important safety notices :
Components identified with the mark ⚠ have the special characteristics for safety. When replacing any of these components. Use only the same type.

◆ Block Identification of Main PCB

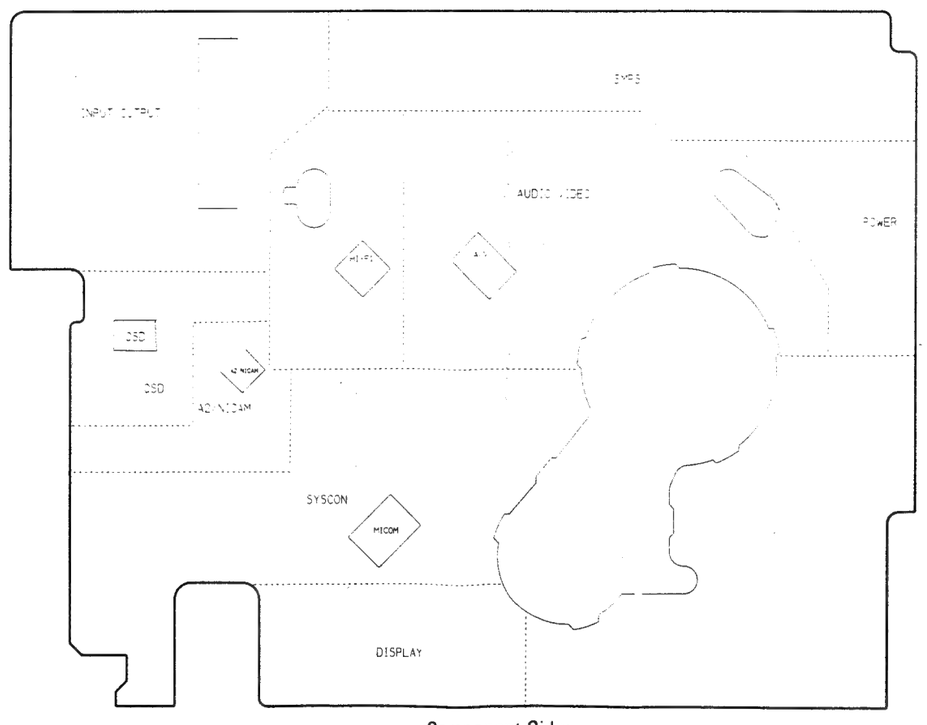

<Component Side>

This Document can not be used without Samsung's authorization

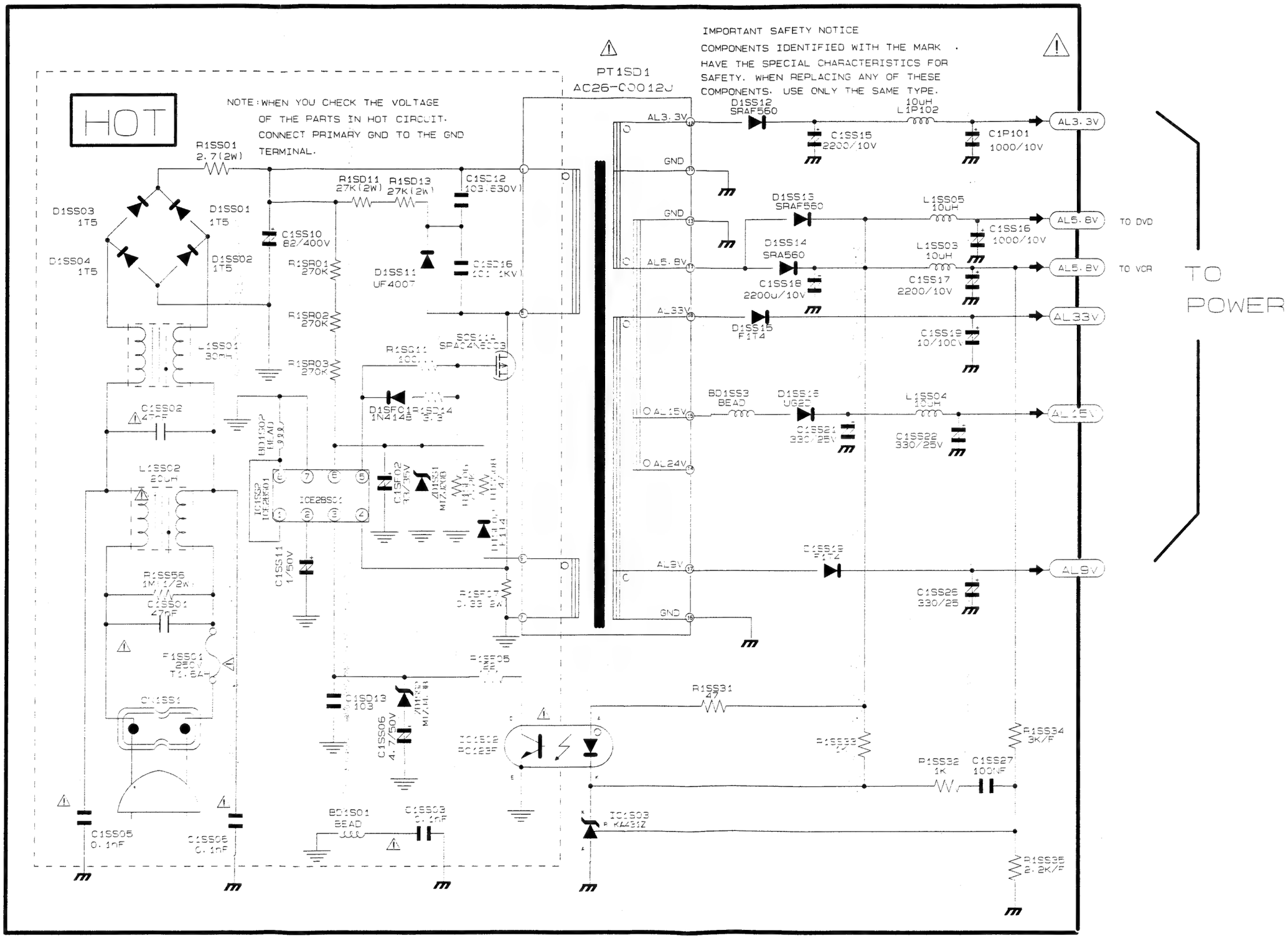

This Document can not be used without Samsung's authorization

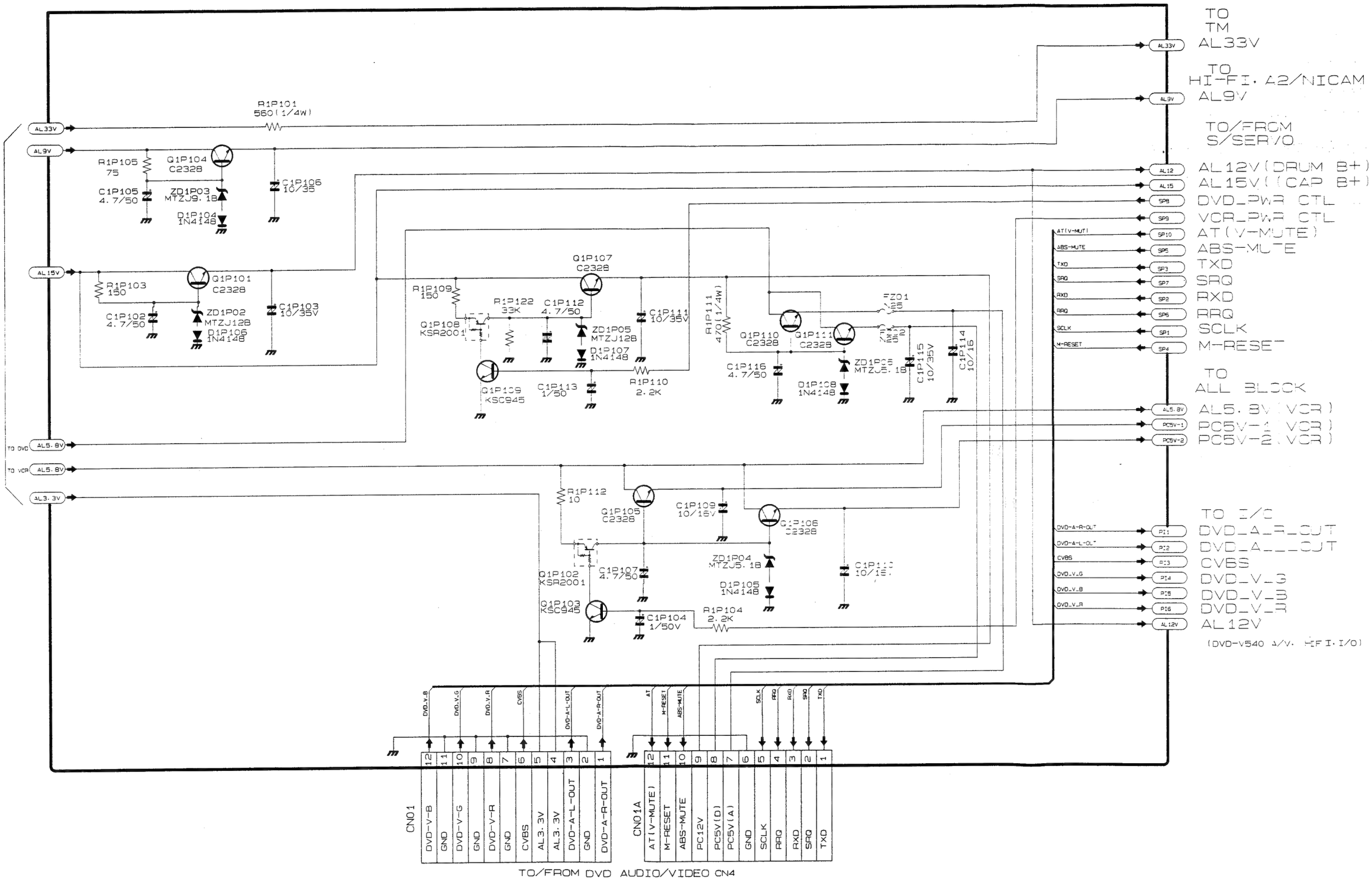

This Document can not be used without Samsung's authorization

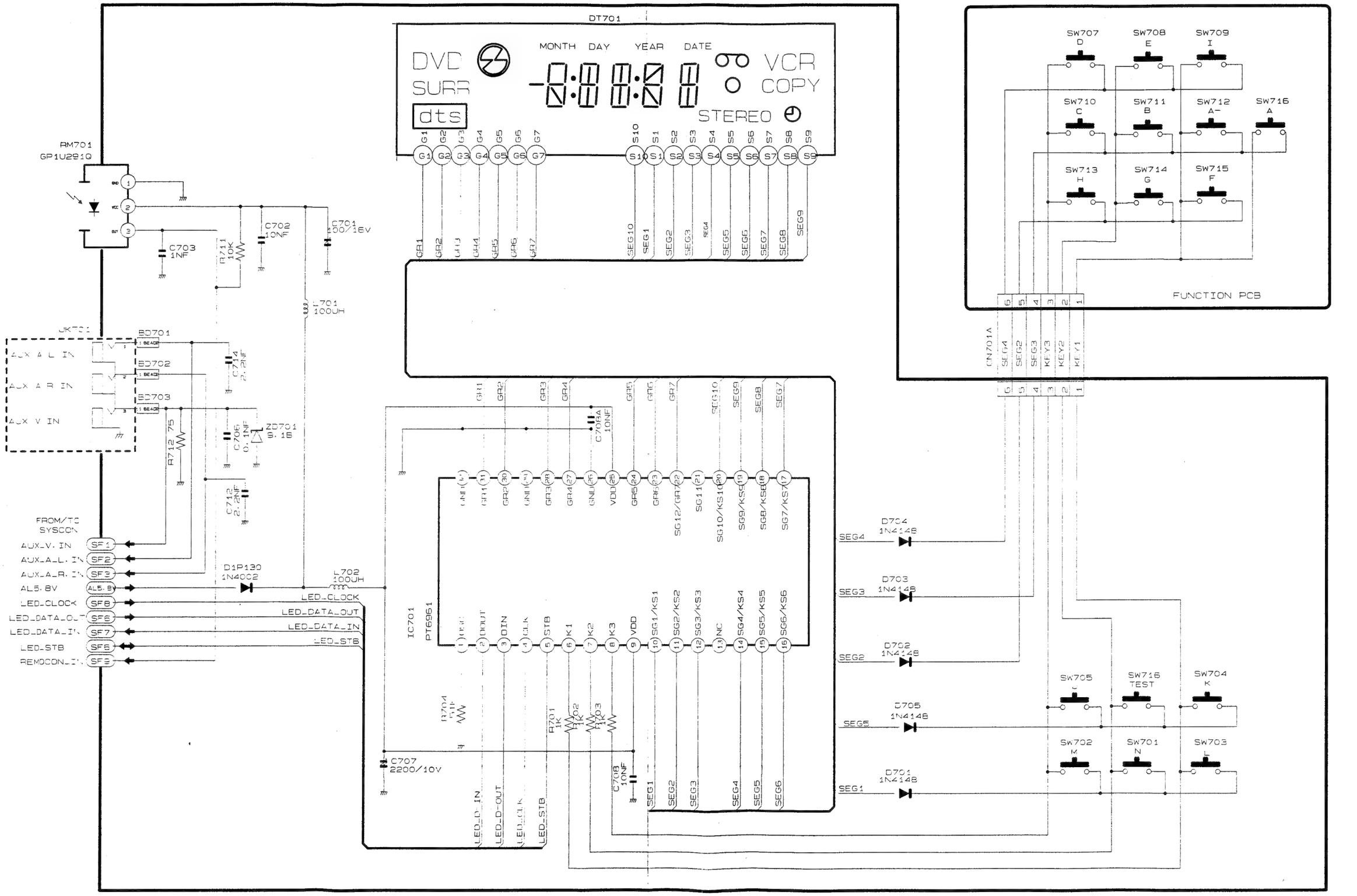

This Document can not be used without Samsung's authorization

6-4 System Control/Servo

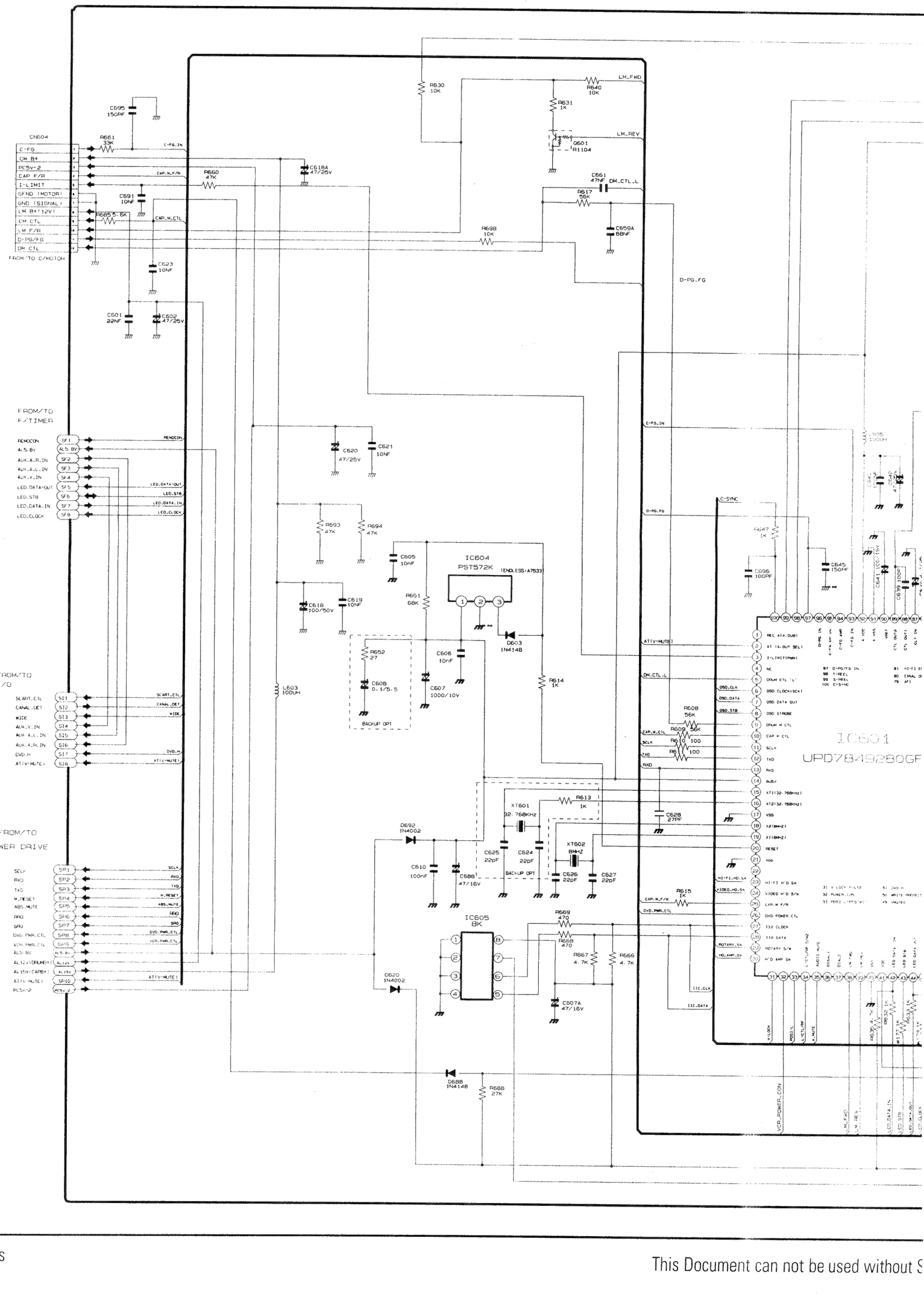

This Document can not be used without S

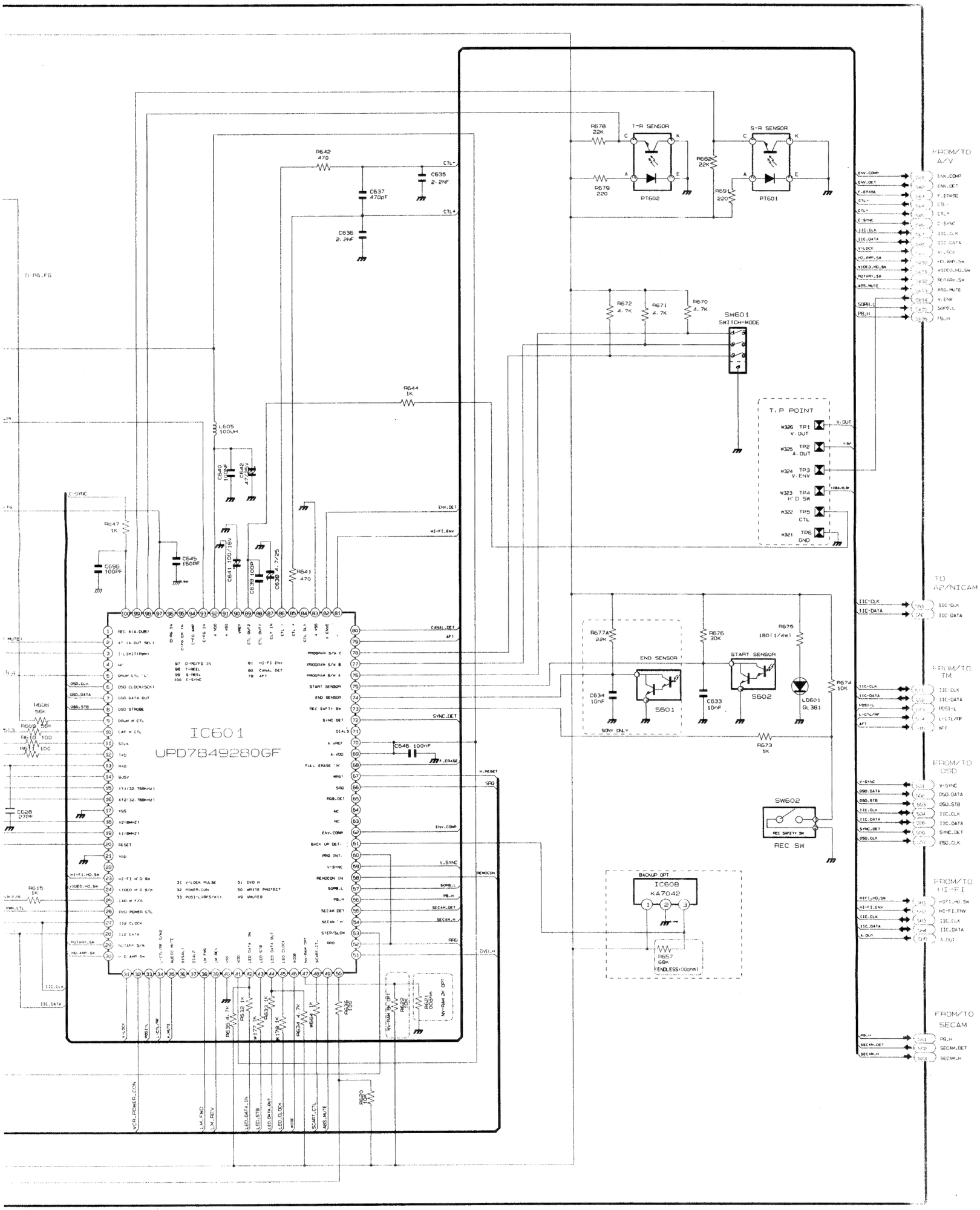
IC601
UPD7849280GF
T-R SENSOR
S-R SENSOR
PT602
PT601
SW601
SWITCH-MODE
T.P POINT
END SENSOR
START SENSOR
S601
S602
SW602
REC SW
IC608
KA7042
FROM/TO A/V
TO A2/NICAM
FROM/TO TM
FROM/TO OSD
FROM/TO HI-FI
FROM/TO SECAM

6-5 A/V

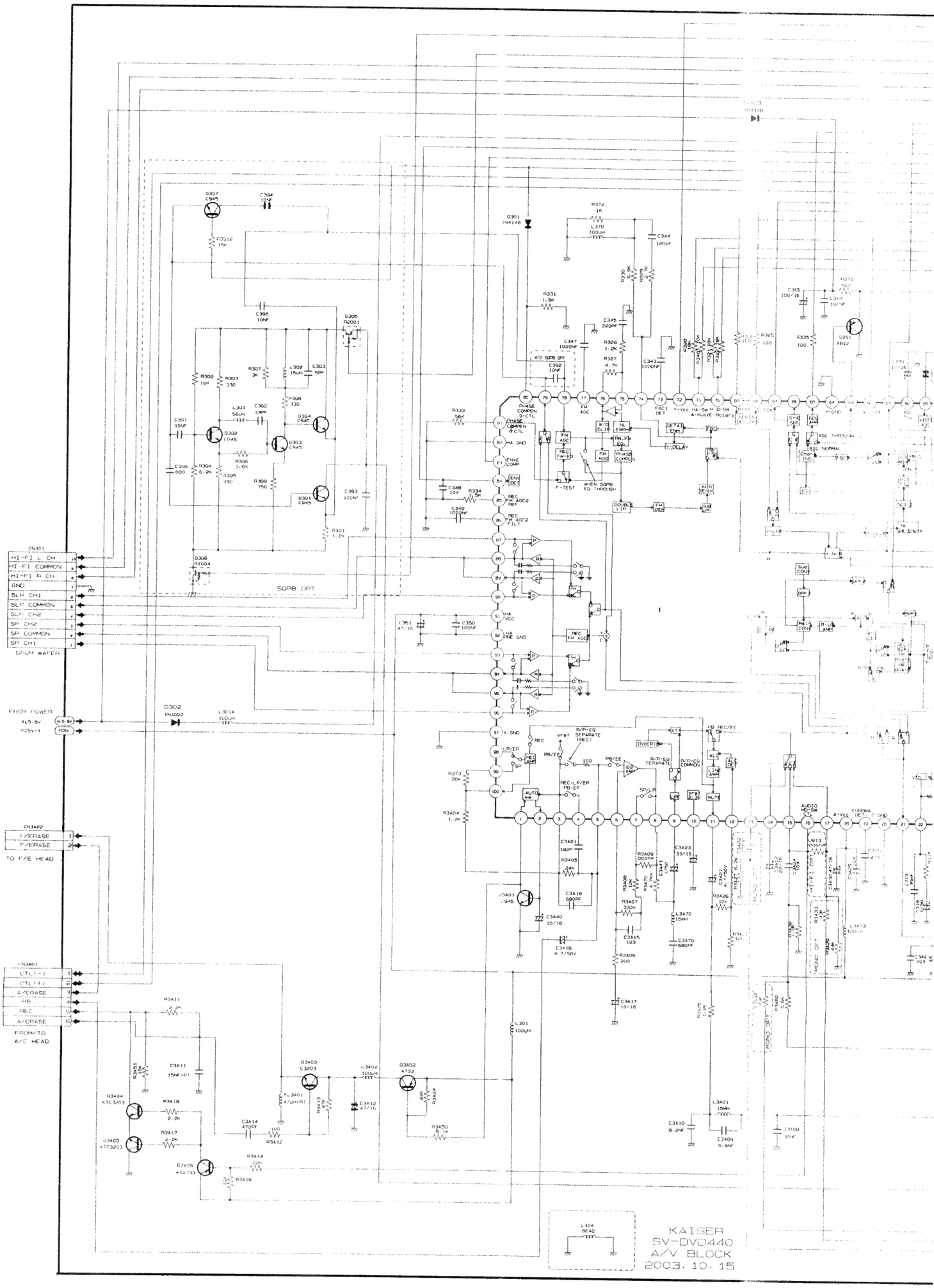

This Document can not be used without Sams

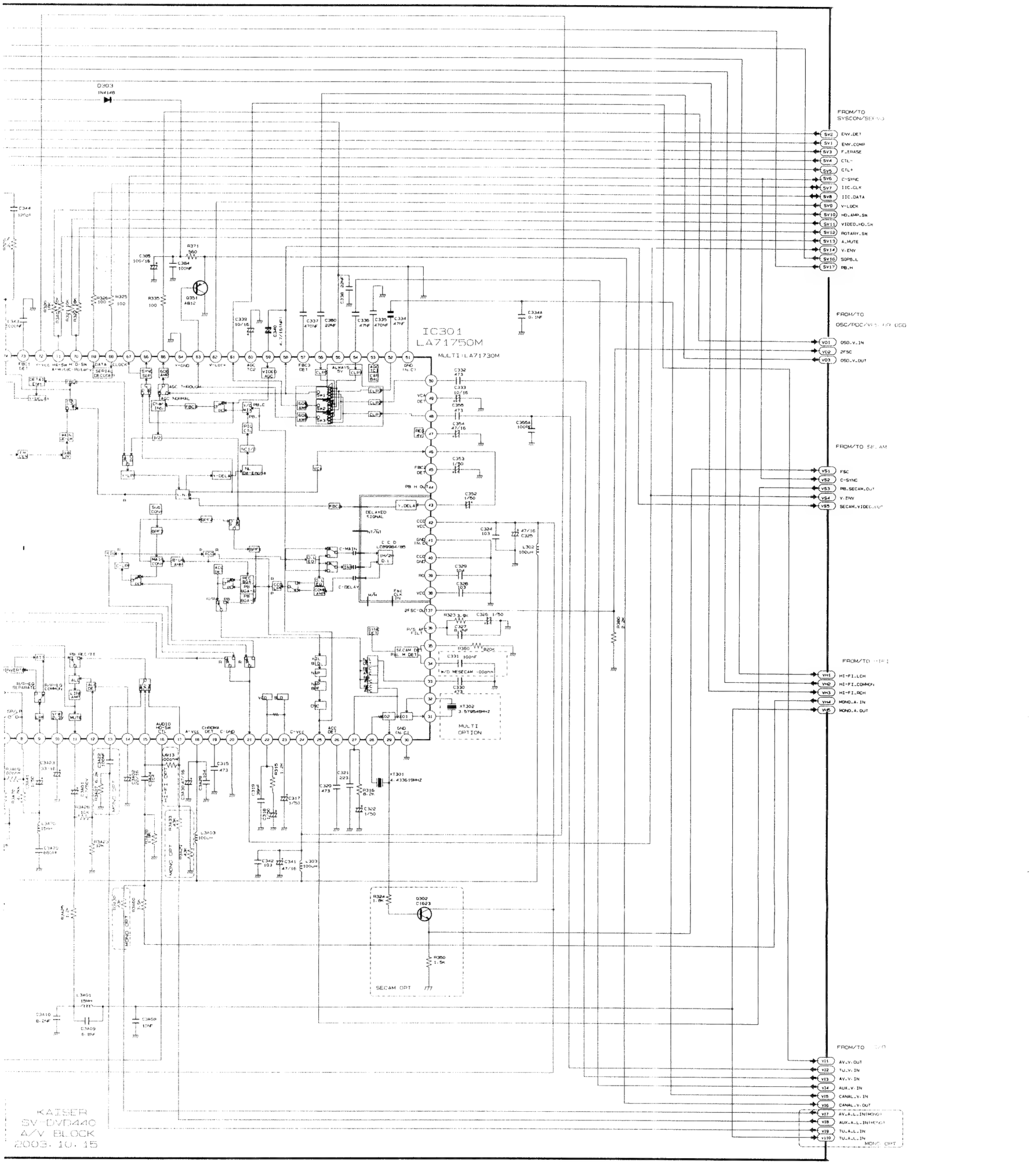

s Document can not be used without Samsung's authorization

6-6 Hi-Fi

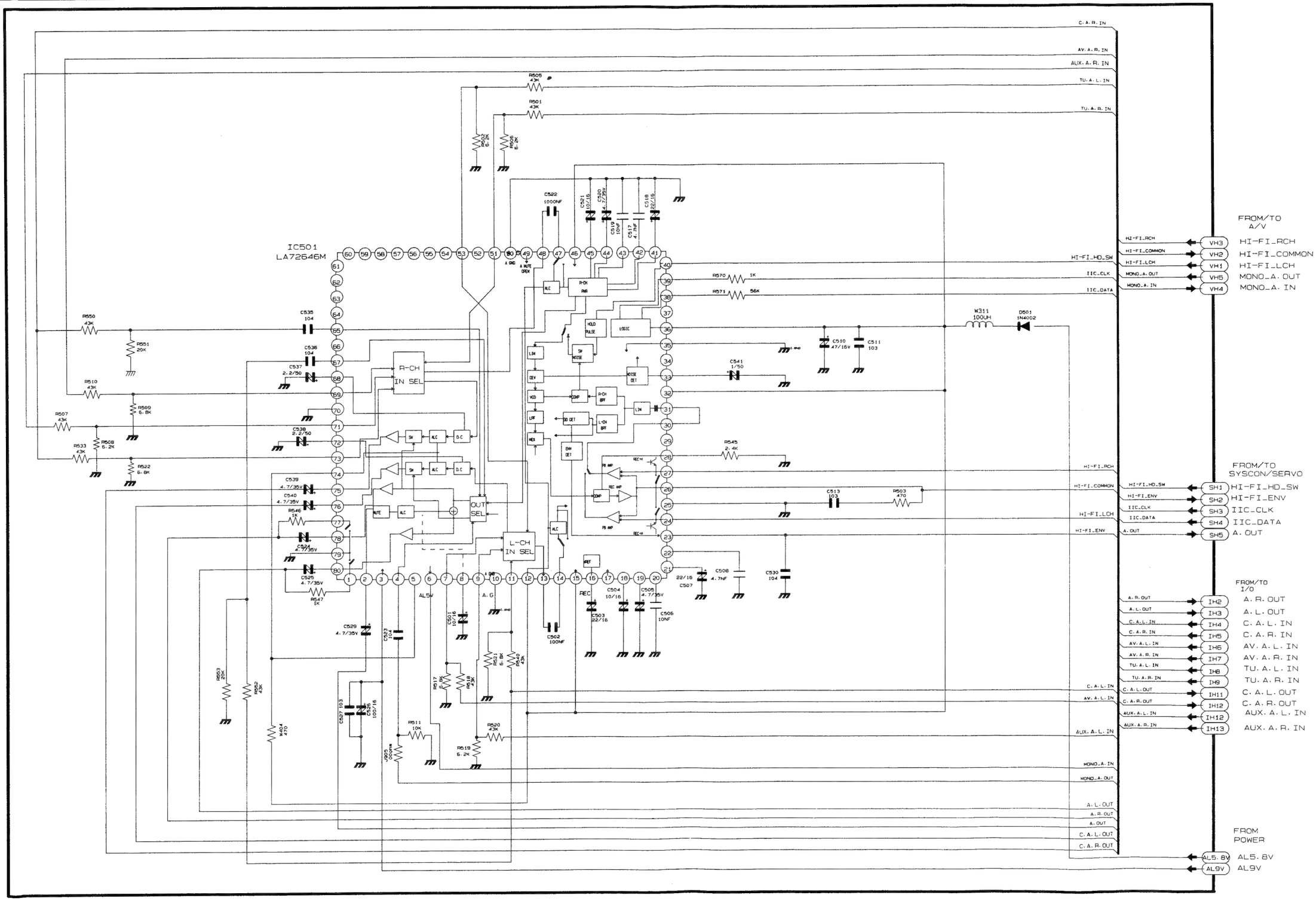

This Document can not be used without Samsung's authorization

6-7 A2/NICAM

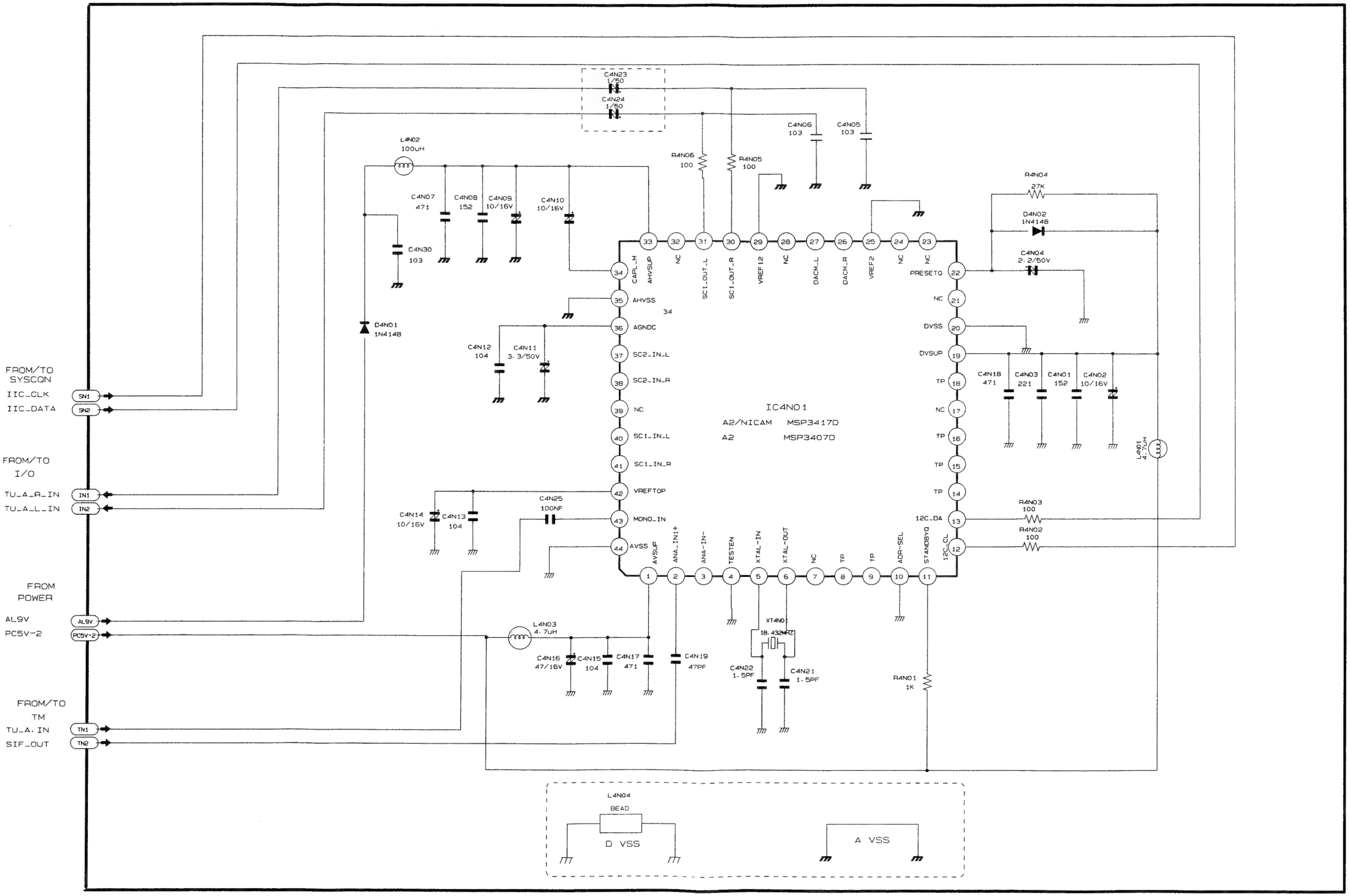

This Document can not be used without Samsung's authorization

6-8 SECAM (Option)

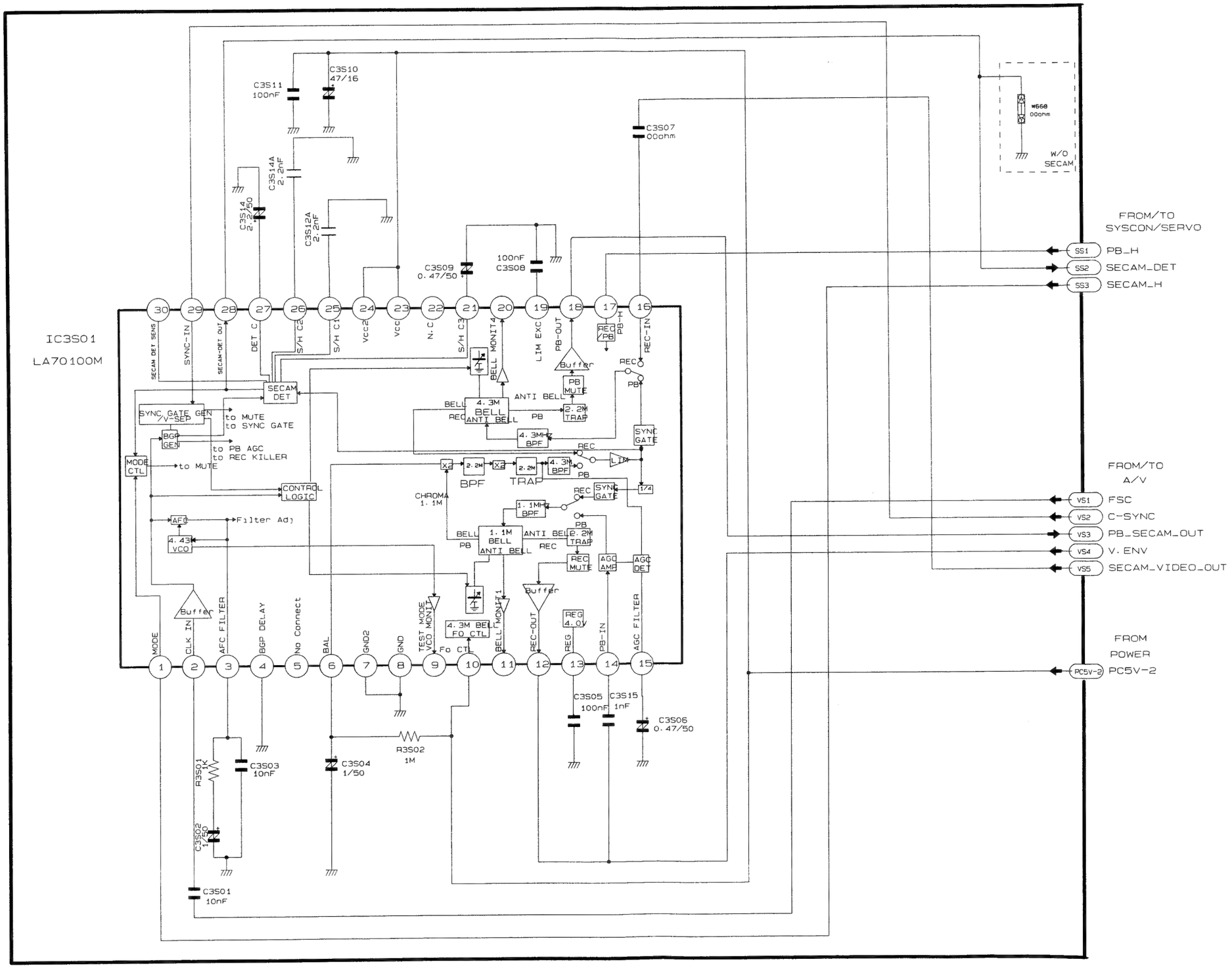

6-9 OSD/VPS/PDC

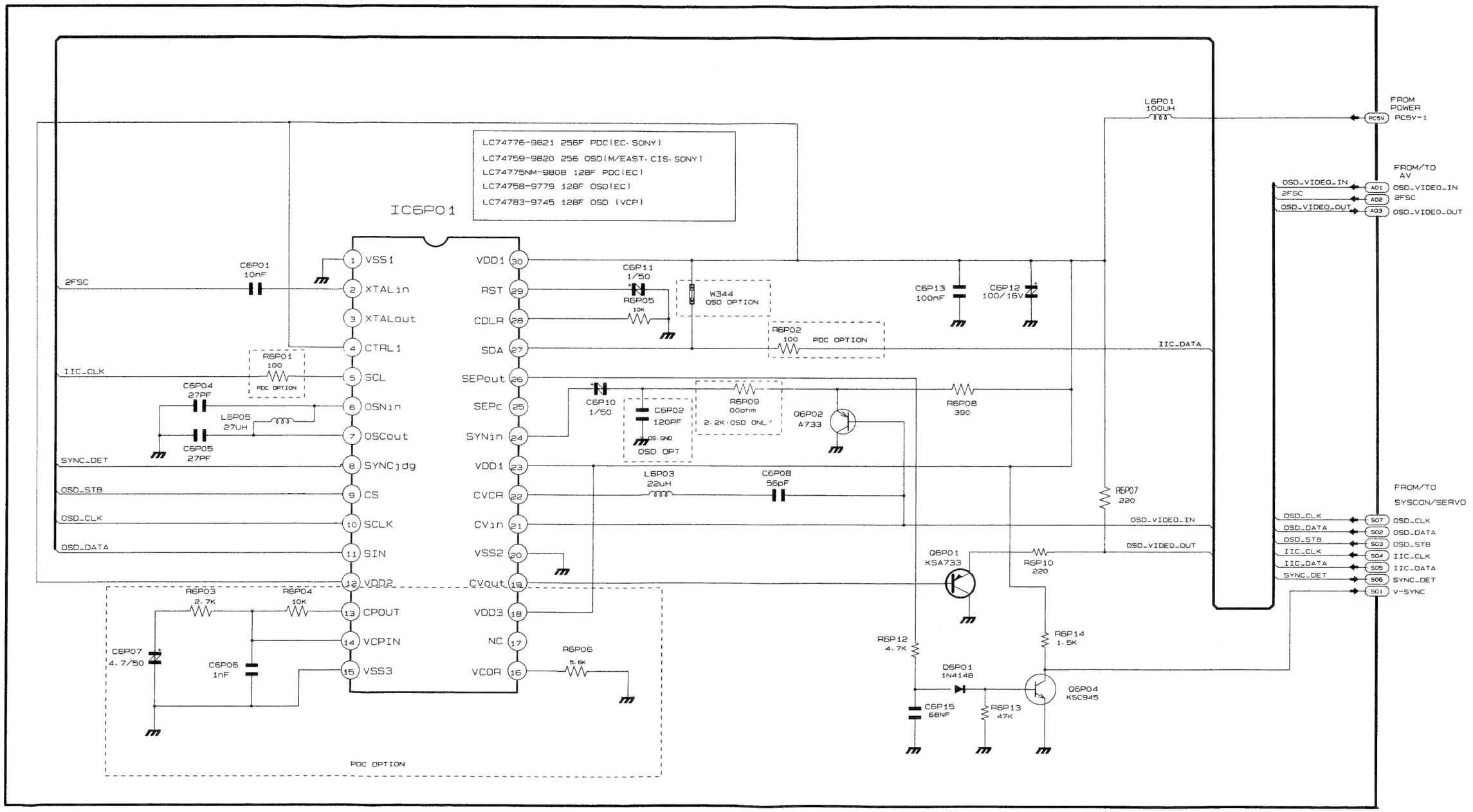

This Document can not be used without Samsung's authorization

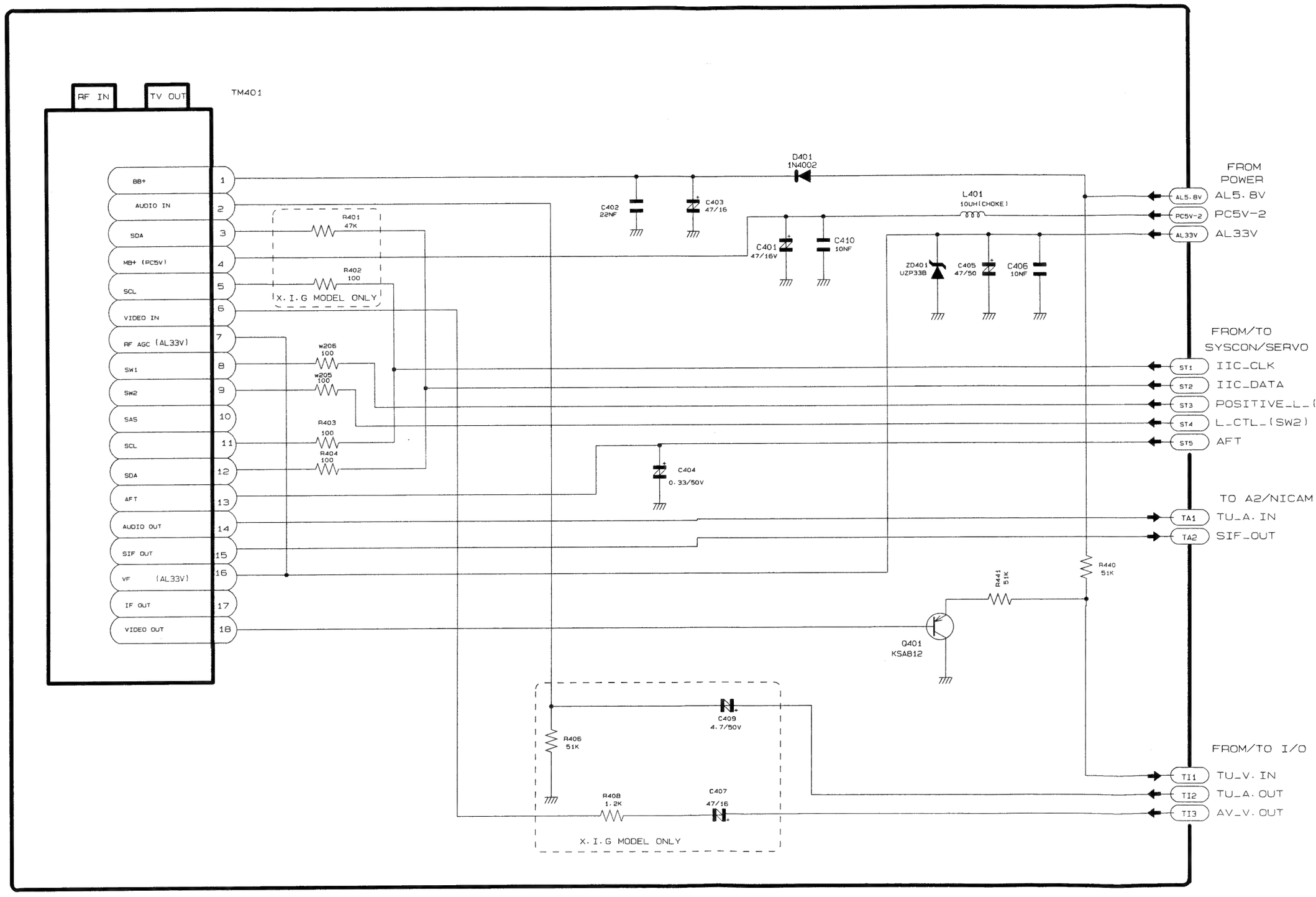

This Document can not be used without Samsung's authorization

6-11 Input-Output

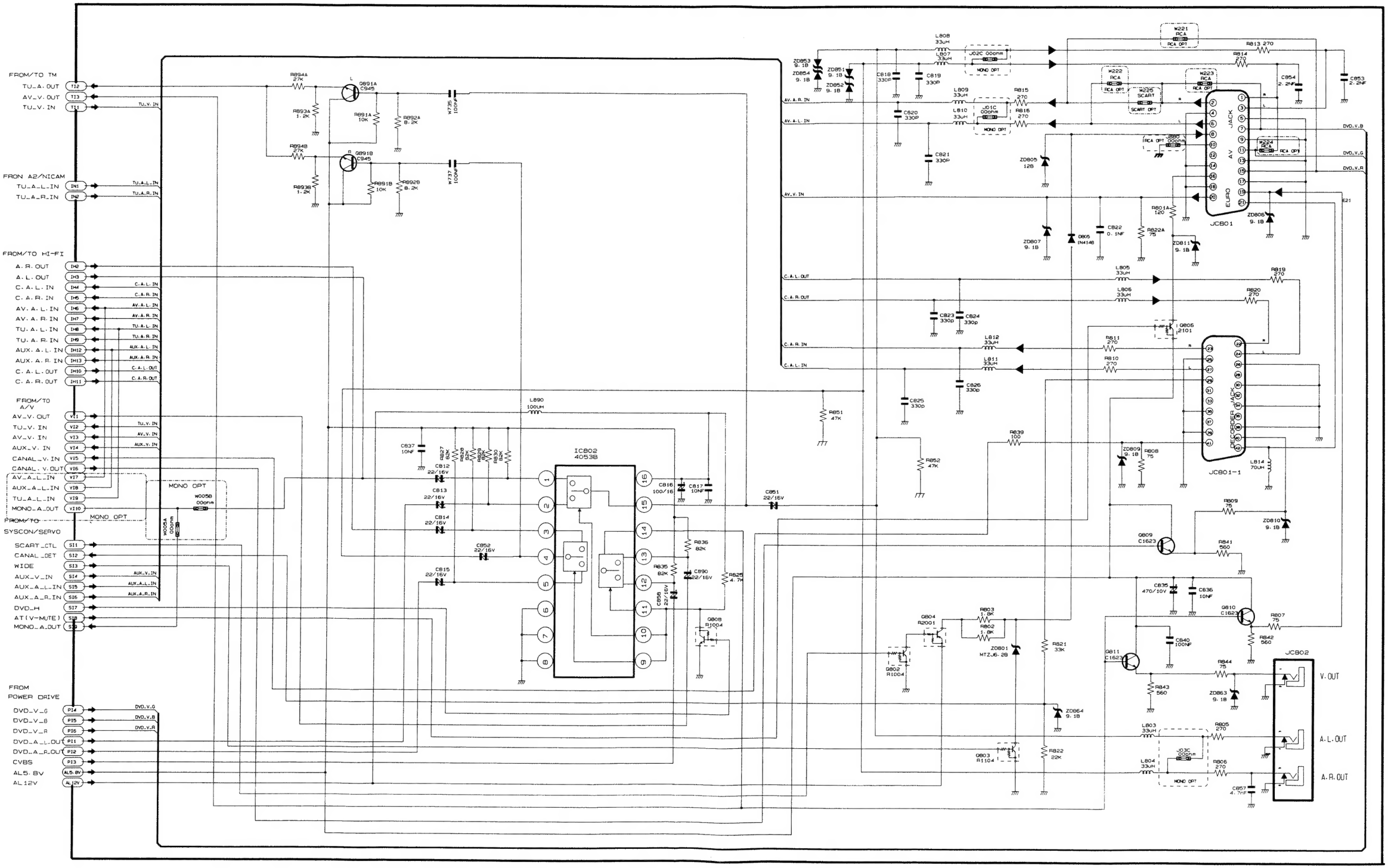

This Document can not be used without Samsung's authorization

6-12 DVD AV DECORDER

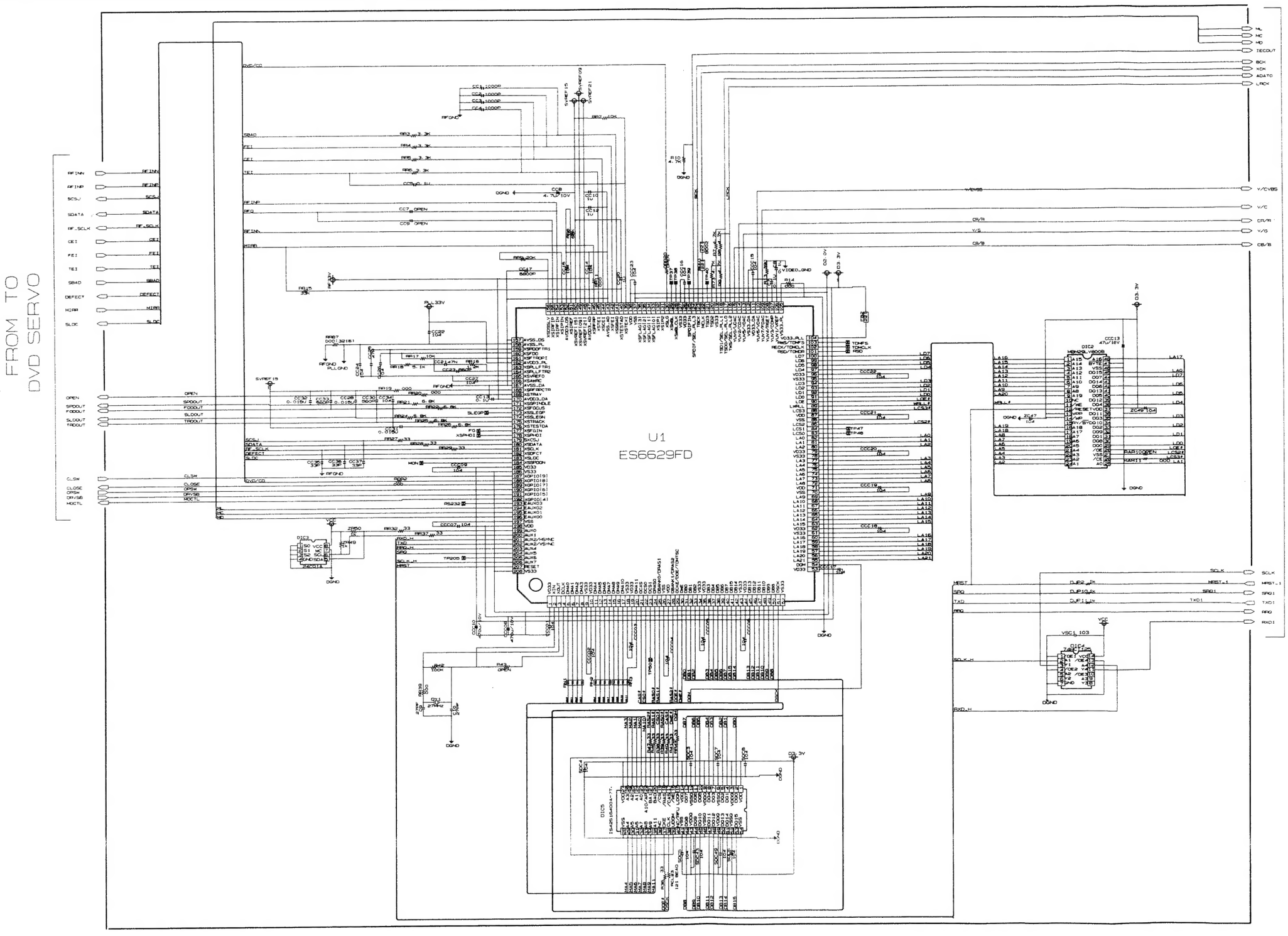

This Document can not be used without Samsung's authorization

6-13 DVD SERVO

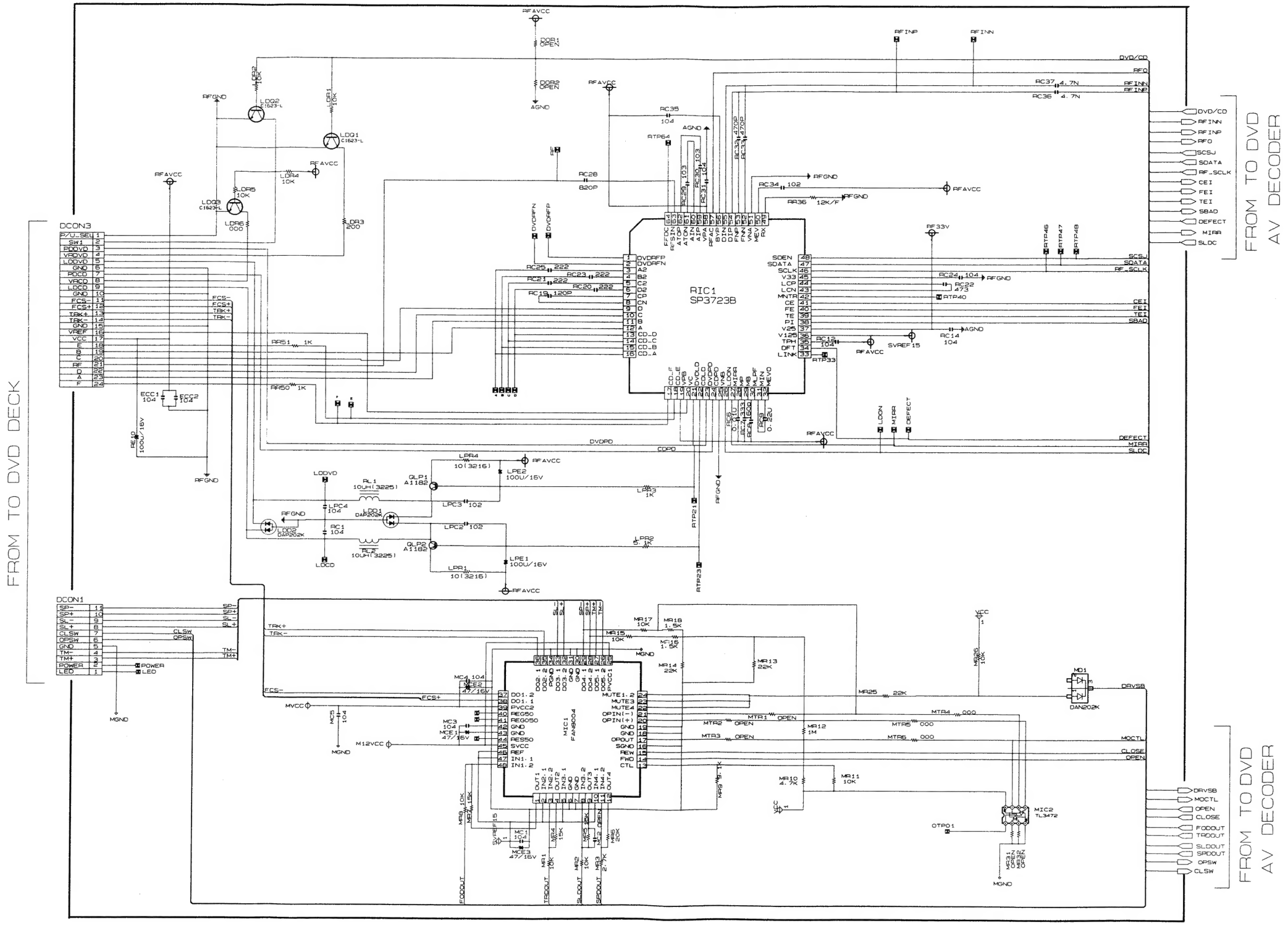

This Document can not be used without Samsung's authorization
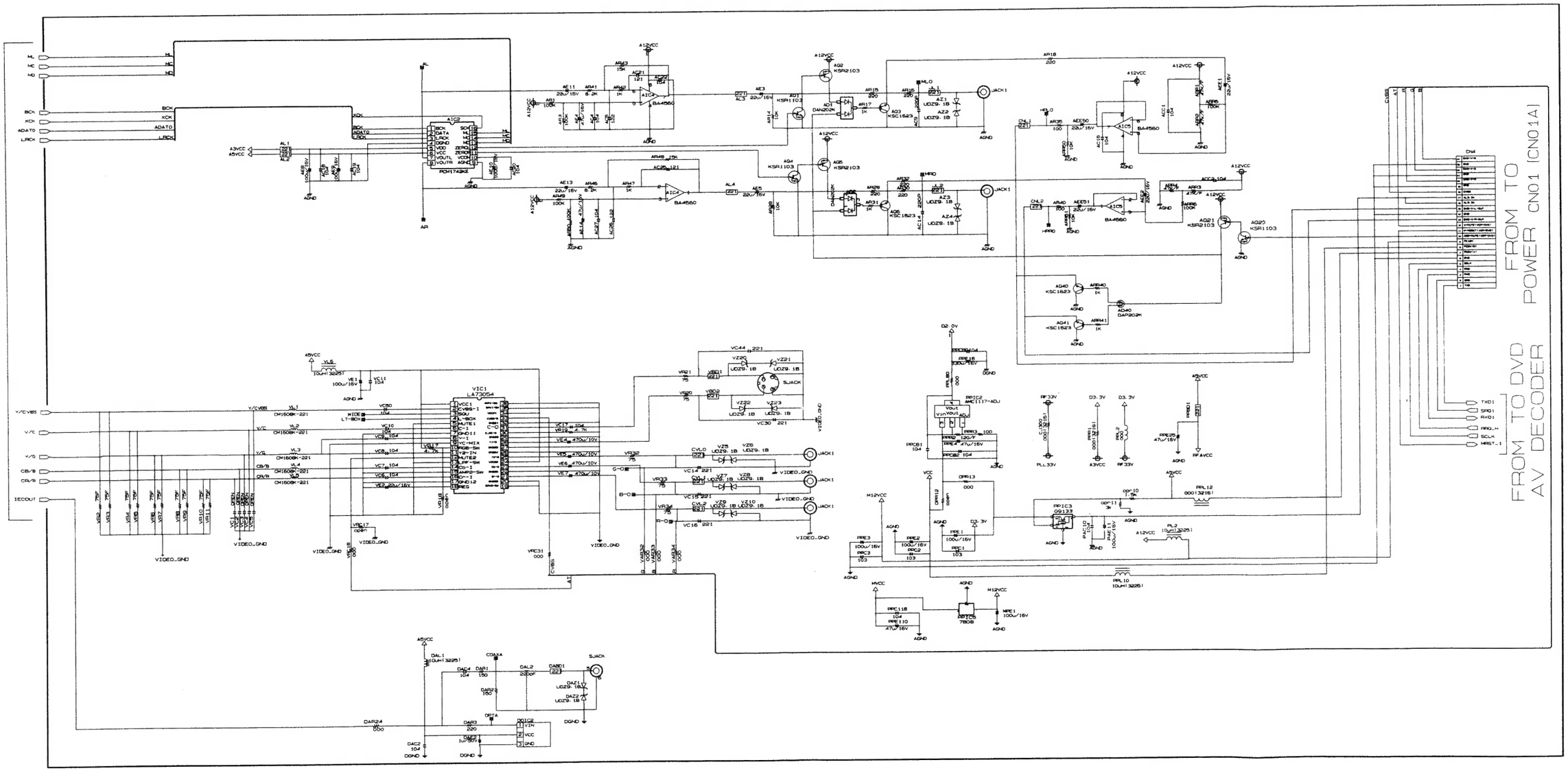
6-14 DVD AUDIO/VIDEO